NORTHSTAR

Take the Lead

MARINE ELECTRONICS

2008 CATALOG

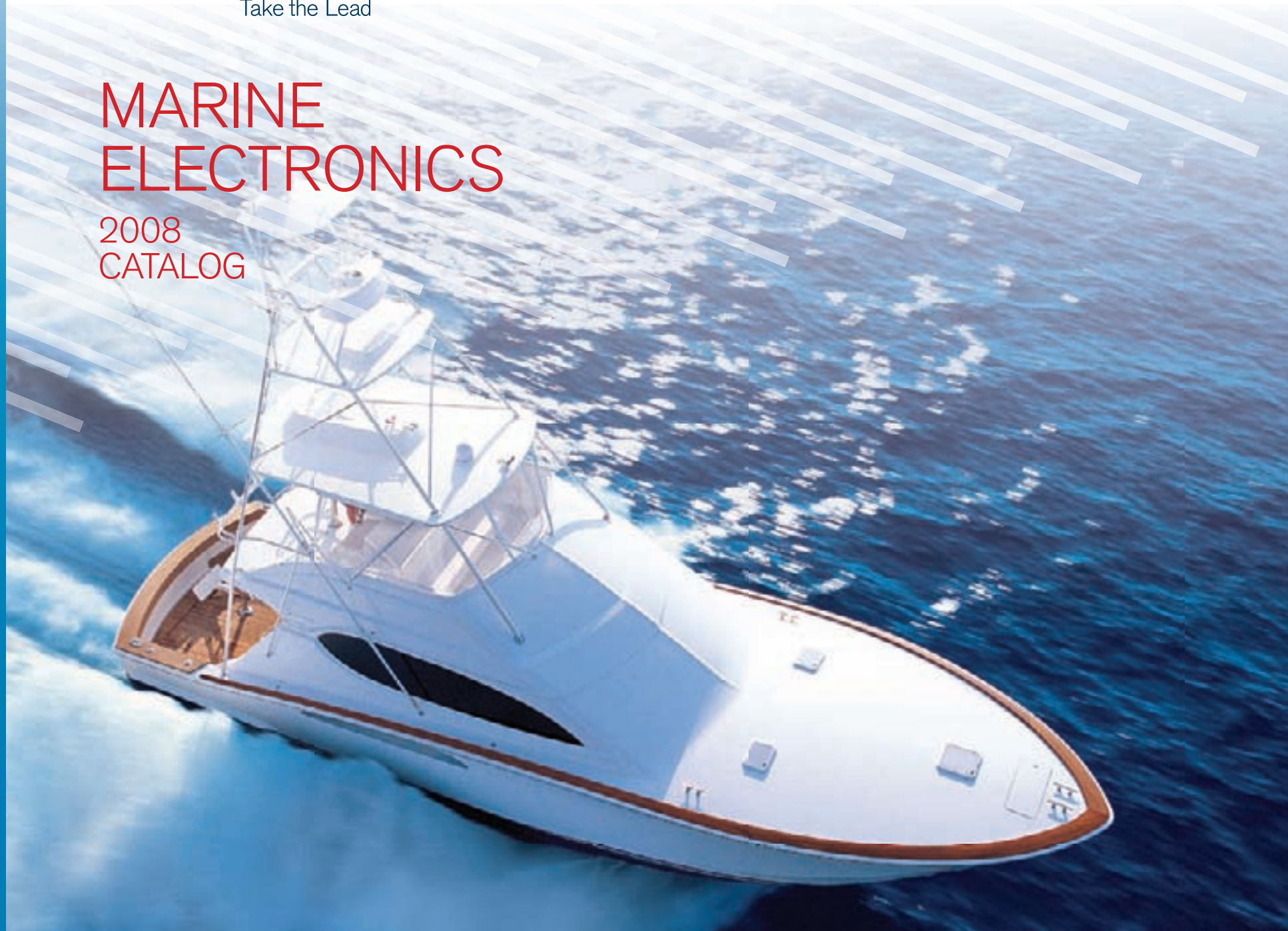

www.northstarnav.com

A brand by Navico - leader in marine electronics

WELCOME TO NORTHSTAR

MARINE ELECTRONICS PRODUCT CATALOG FOR 2008

WELCOME TO NORTHSTAR

We've been in the Marine Navigation business for over 37 years, and in that time the Northstar name has always been synonymous with best-in-class, high-performance navigation solutions. Last year Northstar joined the Navico group, the world leader in marine electronics. Now the combined strength of Navico and Northstar provides the drive for continuous improvement and preservation of our Northstar values.

Northstar's values of innovation, prestige and reliability are the foundation of our heritage. Our conviction for developing products with ease-of-use continues with the 2008 range of products.

RELIABILITY THAT'S BUILT-IN AND A WARRANTY TO MATCH

Northstar warrants that the products will be free from defects in materials or workmanship under normal use for two (2) years from the date of purchase.

In the event that you damage the product or if it needs to be serviced, our global support team, backed by Northstar offices in Europe, USA, Australia and New Zealand is standing ready to provide assistance.

2 YEAR WARRANTY

We look forward to serving and exceeding all of your navigation and communication needs, and hope you have an enjoyable year on the water.

The highlights of our key products include:

- 8000i - Daylight viewable marine Touch Screen featuring
  - Superior C-Map MAX PRO cartography
  - Rugged and waterproof fully networked system components
  - Entertainment features including DVD player, video and music jukebox
- 6100i featuring Sirius satellite weather module to deliver real-time graphical weather information.
- High Definition Digital Radar for safer boat trips
- Ultra flush-mount M Series multifunction displays with video input, HD Digital Radar and AIS capability

NAVIGATE…

Northstar 8000i 4
Building a Northstar 8000i System 6
Northstar 6100i 8
HD digital radar 12
Fuel & engine management 14
M Series multifunction displays 16
Cartography 18
What is AIS? 19
Autopilot systems 20
Building your autopilot system 22
Combo units 24
Chartplotters 26
Fishfinders 28
Instruments 30
VHF Radios 32
Specifications 34
Spatial dimensions 46
Sales and service worldwide 50

TOUCH 4

NAVIGATE 6

SCAN 10

SIMPLIFY 16

AUTOMATE 20

EXPLORE ..... 24 - 32

NORTHSTAR 8000i

PREMIER INTEGRATED TOUCH SCREEN SYSTEM

The Pinnacle of Navigation and Entertainment

It's a navigation system: Chartplotter, HD Digital Radar, Fishfinder.
It's an entertainment center: DVD player, CD Player and Digital Music Jukebox.
It's an information system: Cameras, Video, Instrumentation.

SLEEK & ELEGANT. TOUGH & DURABLE. THE 8000i SYSTEM IS BUILT FROM THE GROUND UP FOR PERFORMANCE AND USABILITY TO THE HIGHEST DEGREE…

Integrating the finest in navigation technology with the latest in entertainment functionality, the 8000i maintains Northstar's legendary ease-of-use while turning heads with an exciting stylish design and slim profile. Suitable for single or multi screen installations, the 8000i is available with a choice of 12" or 15" infrared touch screen displays.

Designed for boat owners unwilling to settle for anything less than the best electronics, the 8000i is a one-stop solution for navigation and entertainment, complete with chartplotter, high definition digital radar, depth sounder, video and network camera monitor, DVD/CD player, music jukebox and instrument repeater.

8000i FEATURES

FULLY NETWORKED SYSTEM

The 8000i is a comprehensive networked system capable of supporting multiple screens simultaneously. Data transfer between units is instantaneous with each device able to independently display and control all data. All components in an 8000i system are fully marinized and built to last.

CARTOGRAPHY

The 8000i delivers Northstar's legendary lightning fast redraw and the latest C-Map MAX Pro vector cartography, providing your boat with a charting system similar to those used on commercial vessels. The entire chart library is contained on the 8000i hard drive, eliminating the need for keeping track of chart cards.

HIGH DEFINITION DIGITAL RADAR

Northstar's high definition digital radar offers industry leading target discrimination as well as radar/ chart overlay (with an optional heading sensor). Networked radar means that any Northstar compatible display in the network can access and control the radar.

SOUNDER

Northstar's newest 1kW networked sounder technology delivers the performance and features you expect, with a range of high performance transducers available.

ENTERTAINMENT

The Northstar 8000i is a completely self-contained entertainment system. Users can store media files directly on the device's hard drive, allowing access to video and audio libraries from any display on the network. The 8000i plays DVDs and CDs.
Users can load their digital music from home with a memory stick.

2D AND 3D CHARTPLOTTER

HIGH DEFINITION DIGITAL RADAR

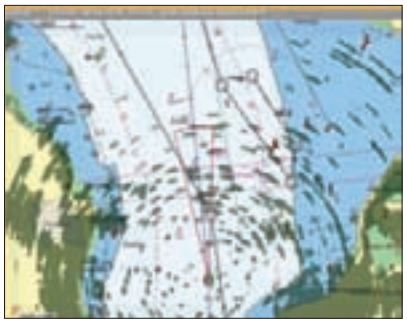

SOUNDER

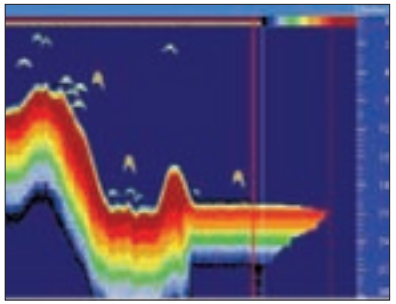

CAMERAS AND VIDEO

SPLIT SCREENS

CUSTOMIZABLE DISPLAY

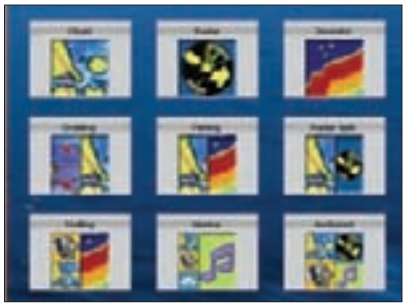

COMPLETE CONTROL
INFRARED TOUCH SCREEN

Touch screen like you've never experienced before.

Zoom in and out, set and edit waypoints and routes with one finger operation. Easy and intuitive in all screen options.

Don't consider other brands until you've used the 8000i interface.

MAX PRO

12" DISPLAY

15" DISPLAY

TOUCH SCREEN

8000I SERIES DISPLAYS	PART
12" 8000i System	NS004700
15" 8000i System	NS005000

BUILDING A NORTHSTAR 8000i SYSTEM

COMPLETE CONTROL AT YOUR FINGERTIPS…
INFRARED TOUCH SCREEN OR DASH MOUNT KEYPAD, THE CHOICE IS YOURS.

The 8000i 12" and 15" displays are waterproof, sunlight viewable, and have Northstar's new Infrared Touch Screen technology.

The 12" is an all in one unit, the 15" option separates the processor, screen and keyboard into components. This allows you to mount your system exactly the way you want.

Note: This diagram is intended to show how the various 8000i components add functionality to the system – it is not a wiring diagram.

LINKER
Add a Network Linker if your system includes more than two network components NS004721. Network cables sold separately.

HD DIGITAL RADAR
Networked radar with advanced signal processing to all displays. See page 13 for part numbers.

OPTIONAL LCD SCREEN
Plan your next passage from the comfort of your cabin or salon.

TRANSDUCER
See page 42 for part numbers.

NETWORK SOUNDER
NS004741

15" INFRARED TOUCH SCREEN
The 15" 8000i monitor is designed to work with the 8000i Black Box processor and a range of standard composite and digital video sources.

NS004710

REMOTE KEYPAD
Traditional keypad for additional full control of an 8000i display.

NS004747

BLACK BOX PROCESSOR
Marinized, rugged unit for use with the 15" 8000i monitor or optional LCD screen.

NS004730

▲ 3D/CHART SPLIT SCREEN FROM MAX PRO

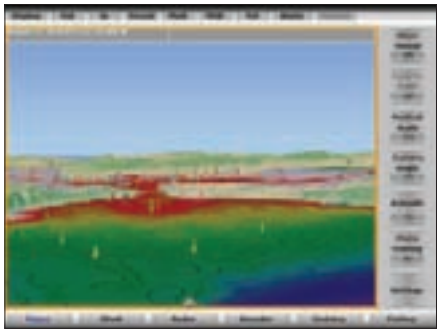

▲ BATHYMETRIC CHART FROM MAX PRO

DVD/CD PLAYER
NS004740
Turn any display into a CD/DVD system simply by connecting our DVD player. Hook up your audio system and 8000i becomes your entertainment center.

NETWORK VIDEO
Axis Video Server Network Video facility allows multiple composite video sources to be shared across the network (Axis 241QA, Axis 241Q, Axis 241SA, Axis 241S, Axis 243SA recommended).

12" INFRARED TOUCH SCREEN
WITH INTEGRATED PROCESSOR

NS004700

4 PORT USB HUB

Connect to 8000i USB devices such as the Remote Keypad, CD/DVD Player or other third party peripherals

NS004720

124 GPS Antenna

NS004743

OPTIONAL AMP
Add an audio system to create a digital music jukebox. Every processor unit has stereo output capability.

C-MAP by JEPPESEN

Demand the best…Northstar 8000i powered by MAX Pro

When we developed the 8000i we demanded the best electronic charts that C-Map could provide and MAX Pro was born. MAX Pro is the first chart format for leisure craft that meets ISO 19379 certification and provides the same levels of accuracy and quality as those found on SOLAS class vessels.

Every 8000i has the complete set of MAX Pro vector charts embedded on its hard drive. Simply choose your area of interest, purchase and enter, a license code. Whether sports fishing in Florida or bluewater cruising around the world, MAX Pro charts will give you all the information that you could possibly need, including 25,000 coastal charts, worldwide tidal database, detailed C-Marina port information, high resolution bathymetric charts, satellite imagery and aerial photos.

- **Looks and feels like a raster chart** but with the "intelligence" of a C-Map vector chart
- **3D, Satellite Image Overlay**, C-Marina pilot book database, detailed bathymetric charts, immediate chart unlocking, worldwide tidal database
- **Keep your MAX Pro charts up to date** with C-Map's unique 24/7 "Real-time" updating service
- **Guardian technology** to automatically detect and highlight potential charted hazards in front of your vessel

NORTHSTAR 6100i

INTEGRATED NAVIGATION SYSTEM

Northstar's 6100i will change the way you think about and use marine electronics.

Plotter, HD Digital radar, sounder and video are all easy to use.
The 6100i is smart - whether it's a stand alone or networked system. You pick the display size you want, you choose the functions you need. Start simple, it stays simple, no matter how big the boat, how many stations or how many functions you add. It's all about flexibility. The 6100i offers total integration. Hardware. Software. Upgrades. Plug it in and turn it on.

WE CALL IT A NETWORK

N2 Technology is Northstar's method for moving information around your boat. You don't see it, but it's the workhorse inside your unit. Enter a waypoint on one display, and see the waypoint on every display. Insert a Navionics® chart card in the master unit and N2 makes that chart data available to all other units on the boat (as though the card were plugged into each unit). Add a radar to your 6100i, and all units can display and control radar. N2 puts the sounder display in the cockpit.
N2 is what lets you do anything from anywhere.

Combine your Northstar 6100i with the Northstar Weather Module and you can get real-time graphical weather information (see page 11 for more details).

Northstar's 6100i crisp and clear displays are available in five screen sizes to suit your dash. They are the perfect setup for center consoles or sport cruisers.

Pick a single function, or pick them all! Plotter, HD Digital radar, sounder, video, multi-function displays, split screens, and overlays all via one button.

6100i DISPLAY FEATURES

- Networkable Combo Chartplotter, Sounder, Radar, Video, Satellite Weather
- Cartography: Navionics® Platinum, Platinum+, Silver, Gold, Gold+
- Screen: High-Resolution, Direct Sunlight Viewable Screen
- Fast Network Performance
- Sonar: Module High Power Dual Frequency (600/1000W, 50/200kHz)
- HD Digital Radar: Multiple Power & Size Array and Radome Scanners (2kW, 4kW, 6kW,10kW, 25kW)
- Video input and outputs
- SmartCraft™ Engine Monitoring (Diesel and Gas)
- Waterproof Rugged Casing
- Available in 6.4", 8.4", 10.4", 12", 15"

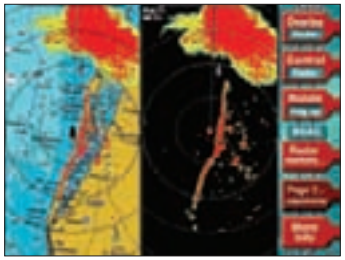

▲ SPLIT SCREEN RADAR/CHART OVERLAY

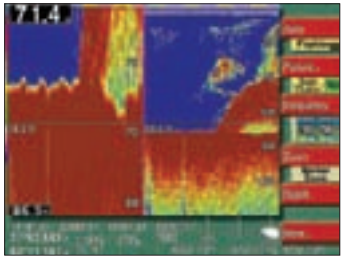

▲ SPLIT ZOOM SOUNDER DISPLAY

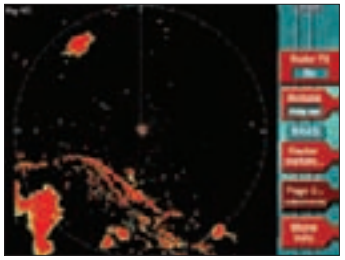

▲ RADAR

▲ NTSC / PAL VIDEO OVERLAY

PLOTTER

The Northstar 6100i chartplotter is the core of the integrated navigation system. Concise, crystal-clear Navionics® Platinum cartography presented on full-color displays with blindingly fast speed, with award winning Platinum cartography available on the 6100i, all at the touch of a single key.

Each size comes standard with GPS and WAAS. Touch-of-a-key simple and vintage Northstar.

Optional cartography required.

SOUNDER

Northstar's 6100i sounder makes fishing easy.

Razor-sharp screen clarity gives you all the information you need. Mark a fish? The unique SoundTrac™ feature, lets you scroll back in "history" and navigate back to the exact spot with the touch of a button. Standard features include:

Dual-frequency (50/200 kHz). Four zoom modes: bottom, bottom lock, bottom lock center, and marker zoom. Nine different screen color sets.

Adjustable fish, bottom, and temperature alarms. Depth in feet, fathoms, or meters, speed through-the-water and water temperature are available.

When you combine the Northstar 491 Sounder with the 6100i navigation and radar functions, the performance is just plain awe-some. Unless you're a fish.

NAVIONICS® CARTOGRAPHY

XL, XL3 and XL9 Size Coverage for both Fresh and Saltwater
Great detail: 3D View, Satellite Photo Overlay, Panoramic Pictures, Port Services & Points-of-Interest, Tides & Currents, Coast Pilot Books
Easy to use: Plug-and-play cartridge is ready to use, no CDs, down-loads or unlock codes required.

Concise, crystal-clear Navionics® cartography presented on full-color displays with blindingly fast speed, with award winning Platinum cartography available on the 6100i.

NAVIONICS® THE LEADER IN ELECTRONIC CHARTS

HIGH DEFINITION DIGITAL RADAR

Radar was designed to be part of the 6100i integrated navigation system.

You don't "learn" this radar. You use it. Night or day, the clarity of information verges on inspirational. Use the image in chart-overlay or split-screen mode and even the most daunting passages become a snap. RangeRider™, a Northstar exclusive, automatically saves your tuning adjustments for each range. When you go back to a range, the settings you've made are already there.

Radar data can be presented in North Up, Course up, Leg Up and Heading up and of course you can overlay the radar on the charts.

Add a radar when you're ready. You choose the power and the antenna you want. It's a very sophisticated radar, yet a very flexible part of the 6100i system.

VIDEO - IT'S EVERYWHERE

The 6100i integrated system has NTSC and PAL video input and VGA output. Perfect for docking/engine monitoring/underwater cameras, DVD and TV. Just press the video key. It's full of remote possibilities. Football next to the sounder display in the cockpit. Radar displayed on the TV*, or any external monitor/display. Giving you sizeable video from any source on the boat.

COMPLETE SYSTEM WITH STANDARD WAAS GPS ANTENNA (AN150-P) & 50'/15 METER CABLE	PART
6.4" 6100i Network System	NS006051
8.4" 6100i Network System	NS006061
10.4" 6100i Network System	NS006071
12" 6100i Network System	NS006081
15" 6100i Network System	NS006091
6100i Remote Control	6KRMC-A
6100i Ethernet Switchbox*	SWITCHBOX-IK
6100i High gain antenna	AN156-P

Note: * Network cables sold separately

AVAILABLE IN:

6.4" DISPLAY | 8.4" DISPLAY | 10.4" DISPLAY | 12" DISPLAY | 15" DISPLAY

491 SOUNDER MODULE FOR 6100i

Northstar's 491 Sounder.
All the information you need, all the time.

This unit offers you the same easy to use functionality and screen clarity for under-the-water information that you would expect from Northstar's unmatched chartplotter, GPS and radar. The 491 is loaded with enhanced target discrimination results. This gives you precise distinction between bait fish and larger fish.

Northstar's SoundTrac™ gives you the ability to go to a target and rename the place to save it permanently in the fish's history and easily navigate to it. The Northstar 491 is feature rich: 50/200kHz. 600/1000W. Bottom Lock. A Scope. White Line. Alarms for depth, fish, and temperature. Northstar matched transducers. Each feature can be tuned to fit your needs. Or, simply leave the 491 in auto mode and start fishing.

	PART
491 Sounder Module complete (includes kit)	NS000491

THE SERIOUS ANGLER'S SOUNDER

Simply press the 6100i "clear" key (CLR) to hide all menus and increase the information display area on screen.

There are four zoom modes, bottom zoom, bottom lock, bottom lock center and marker zoom. "Bottom zoom" zooms in on the sea-bed. "Bottom Lock Zoom" flattens out the bottom and shows echoes just above it. Bottom Lock Center does the same as Bottom Lock, but the sea-bed is in the middle of the zoom display (allowing you to see below the sea-bed). Marker zoom allows you to move the marker on the normal view mode, and the zoom display follows the depth of the marker. You also can select the zoom level (as with all zoom modes).

Dual Frequency: Display 50 kHz or 200 kHz individually in full screen mode or together on the split screen.

Basic navigation data is displayed at the bottom of each screen. The alarm screen allows you to set custom fish, temperature and depth alarms to help you find specific fish.

Northstar's graphic user interface makes changing sounder settings quick and easy.

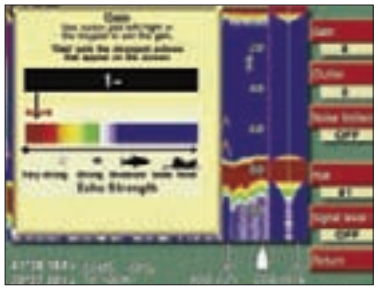

▲ ADJUSTING THE GAIN ON YOUR 6100I

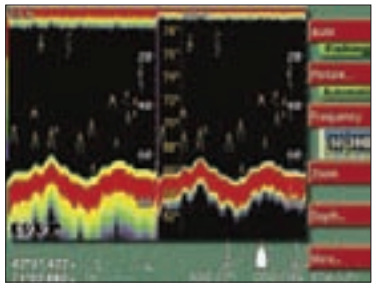

▲ DUAL FREQUENCY (0 SIGNAL LEVEL)

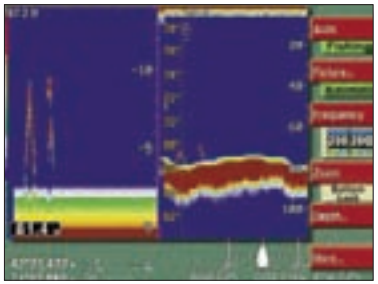

▲ BOTTOM LOCK ZOOM (SEABED IN ZOOM MODE)

NORTHSTAR WEATHER MODULE FOR 6100i

Northstar Weather Module:

Northstar has teamed with Sirius Marine Weather to deliver real-time, graphical weather information directly to your 6100i chart screen.

The Northstar Weather Module Includes:

- Receiver, antenna and cabling.
- SIRIUS Marine Weather available anywhere within SIRIUS's satellite footprint, which blankets the 48 contiguous states, and international waters extending hundreds of miles into the Atlantic and Pacific Oceans, the Gulf of Mexico and Caribbean Sea.
- Weather Features Displayed:
  - Weather Radar
  - Sea Surface Temperature
  - Marine Zone Forecasts
  - Marine Warnings
  - Surface Observations
  - Forecast Wave Height
  - Forecast Winds
  - Animated displays

	PART
Weather module	NS004746R

Note: Weather module only available in the U.S.A

▲ WEATHER MODULE AND ANTENNA

THE NORTHSTAR SATELLITE WEATHER SYSTEM: MAIN CHART GUIDE

SIRIUS MARINE WEATHER

1 **Sea Surface Temperature** You can set high and low values to clearly identify water temperatures.

2 **Precipitation** Rain and snowfall info.

3 **Spot Weather** Cursor position reveals spot sea temperature and weather conditions, depending on the overlay choice. Hovering over a surface buoy reveals detailed views (Surface Observations).

4 **Wind/Wave Info** Wave height and wind speed is indicated by color.

5 **Animation** To help you analyze weather patterns and sea surface temperature data over a user-defined period is played back.

6 **Wind Barbs** Indicating direction and speed, these help you identify cyclonic centers and flow patterns.

7 **Lightning Indicators / Storm track**

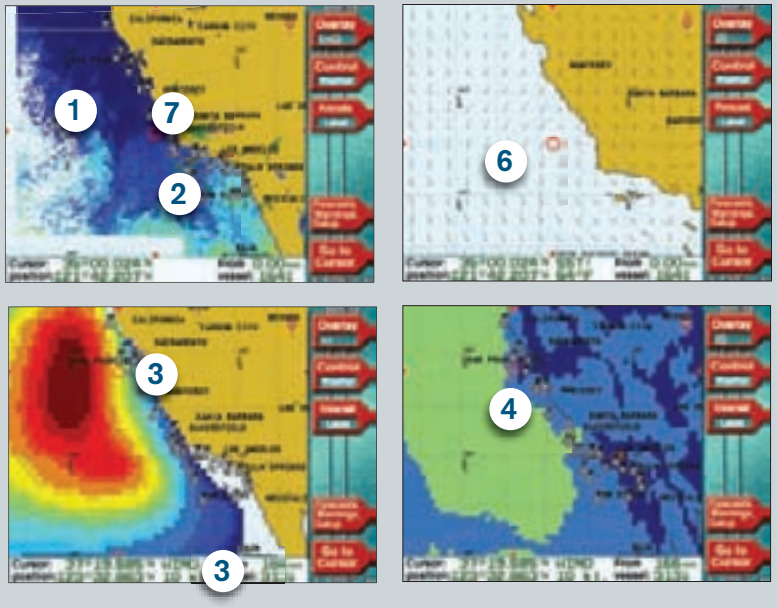

HD DIGITAL RADAR

2kW / 4kW / 6kW / 10kW / 25kW

Networked radar systems combine high performance scanners and microwave technology with the very latest in digital radar processing.

With scanner options ranging from a 2 kW/18" radome up to a 25 kW/84" array there is a High Definition Digital Northstar Radar suitable for your boat.

HIGH DEFINITION DIGITAL RADAR: THE RIGHT CHOICE

We've hired leading radar experts to develop Northstar High Definition Digital Radar, an accurate choice for reliable surface detection. Radar's primary uses are vessel detection and collision avoidance, particularly in reduced visibility conditions like darkness, fog and rain.

FEATURES

- High Performance Scanners
- Networked Radar System
- Brand New Digital Signal Processing Technology
- Radar/Chart Overlay*
- Scanner Options From: 2 kW/18" to 25 kW/7'
- Automatic Tune, Gain and Sea Clutter Adjustment

HIGH DEFINITION DIGITAL RADAR MEANS:

Exceptional detection of small or distant targets, using advanced digital signal processing. Presents targets better and rejects clutter using 10-bit digital Sensitivity Time Control (STC). Screen-clutter from rough weather is cleared away using sensitivity settings tailored for specific conditions.

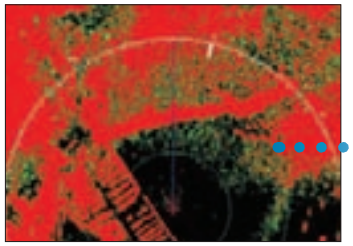

▲ HEAVY RAIN WITH NO STC ADJUSTMENTS

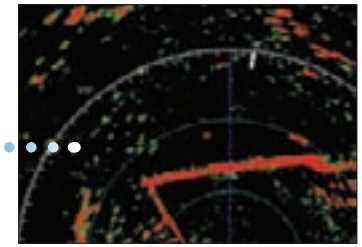

▲ HEAVY RAIN WITH STC ADJUSTMENTS

CHART OVERLAY

With an optional heading sensor, radar brings a wealth of important information to the skipper's attention swiftly and accurately.

GUARD-ZONE ALARMS

If any target detected by the radar enters a user-defined area on the display, the system will alert you to its presence.

STC CURVES

Digital Sensitivity Time Control (STC) curves reject clutter by setting minimum thresholds that consider return strength and distance.

COLOR PALETTES

Different color palettes allow better distinction of target returns, depending on viewing conditions.

CHOOSING A SCANNER

Radomes are compact and lightweight, making them ideal for sail boats and small powerboats where space and power supply are limited.

An open array antenna will deliver better range and detail because of its higher power and narrow beam width.

The effective range of any scanner increases when mounted higher on your boat. The power of a scanner is also an indicator of its range.

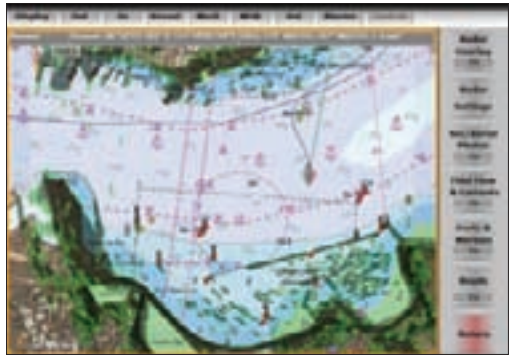

▲ CHART/SATELLITE OVERLAY DISPLAYED ON 8000i

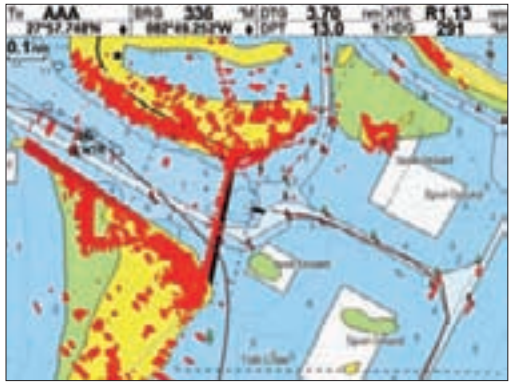

▲ CHART OVERLAY DISPLAYED ON M Series

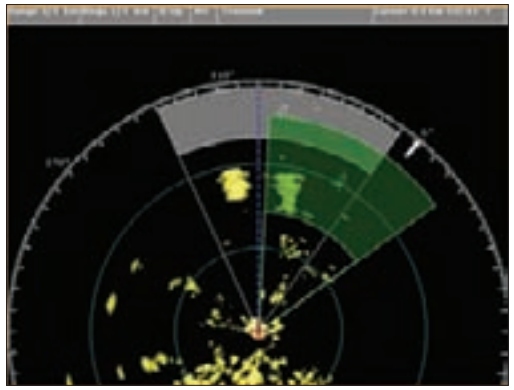

▲ GUARD-ZONE ALARMS DISPLAYED ON 8000i

PREPARING YOUR HIGH DEFINITION DIGITAL RADAR SYSTEM

Adding radar to your existing compatible marine electronics system requires a radar kit including scanner and processor and and a connection cables for your display unit and optional heading sensor. When ordering a radar system, please ensure scanner, processor and cabling are ordered. For information on available heading sensor options please contact your Northstar dealer.

HIGH DEFINITION DIGITAL RADAR

PRODUCT	MODELS AVAILABLE	NETWORKABLE	REQUIRES CABLE
8000i / 6100i	25 kW/10 kW/ 6 kW/ 4 kW/ 2 kW	Yes	NS003107 for 6100i NS003101 for 8000i with heading sensor
M84 / M121	6 kW/ 4 kW/ 2 kW	No	AA002461

RADAR	PART
2 KW DOME RADAR KIT	
18" Radome + Processor Unit + 15 m cable	NS007001
4 KW DOME RADAR KIT	
24" Radome + Processor Unit + 15m cable	NS007002
6 KW ARRAY RADAR KIT	
48" Array + Processor Unit + 20m cable	NS007003
10 KW ARRAY RADAR KIT	
72" Array + Processor Unit + 20m cable	NS007004
25 KW ARRAY RADAR KIT	
84" Array + Processor Unit + 20m cable	NS007005

FUEL & ENGINE MANAGEMENT

SMARTCRAFT

SmartCraft™ - Your personal on-board engine wizard

Available on select Northstar products, SmartCraft™ integration can reduce boat dash clutter and delivers critical engine performance and important diagnostic information to boaters.*

SMARTCRAFT™ FEATURES

SmartCraft™ Total Vessel Intelligence

- Automatically recognizes engine type, configures appropriate settings and displays real-time diagnostics from over 40 sensors
- Reduces dash clutter and maximizes SmartCraft information display
- Display detailed RPM, engine temperature, fuel, oil, water and waste information**
- Displays trim angle and steering angle
- Troll control varies speed of boat for optimal trolling
- Single and dual engine capability**

* See Northstar price list or website for a complete list of SmartCraft™ enabled products.

** Some features are engine type dependent.

SMARTCRAFT™ GATEWAY

Mercury's SmartCraft™ enabled engines offer real-time information on all critical engine, boat and environmental conditions for display on your Northstar unit. From the fishfinder or chartplotter, Northstar provides the boater with detailed engine fault diagnostics that allow the boater to make informed decisions on the water. Northstar with SmartCraft™ - your onboard mechanic.

* Contact your nearest Mercury dealer for a list of compatible Mercury engines. Some data may require additional Mercury sensors not supplied standard with motors.

SMARTCRAFT™ GATEWAY	PART
SINGLE ENGINE GATEWAY FOR M121, M84, 660, 650, 657, 567, 557, 550, 467, 457, AP380	NS005020
TWIN ENGINE GATEWAY FOR M121, M84, 660, 650, 657, 567, 557, 467, 457, AP380	NS005021
SMARTCRAFT™ GATEWAY 6100i	NS002427
TWIN ENGINE SMARTCRAFT™ GATEWAY FOR 6100i	NS002428

▲ SMARTCRAFT FOR M121/ M84

▲ SMARTCRAFT™ FOR 6100i

▲ SMARTCRAFT™ FOR EXPLORER SERIES

FUEL MANAGEMENT FEATURES:

Real-time fuel information…

In addition to providing complete management of your vessel's fuel flow and fuel remaining, Northstar's Fuel diagnostic tools utilize speed data from GPS or paddlewheel input to calculate real-time fuel economy data.

Your Northstar Explorer product can be programmed to display these values in nautical miles (and miles) per gallon or litre. This important information allows you to determine the optimum throttle and trim settings for single and twin engine boats. This will save you money on fuel and minimize long-term engine wear by running your engines at their most efficient settings. Diagnosing engine faults and propeller damage is easy by comparing economy values over time.

▲ FUEL MANAGEMENT ON EXPLORER SERIES

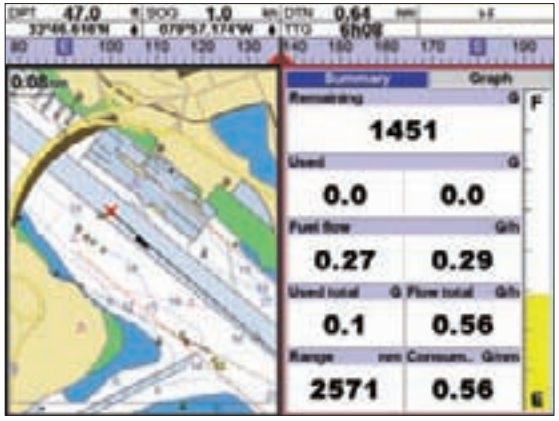

▲ FUEL MANAGEMENT ON M121/ M84

Is your product Fuel Management or SmartCraft™capable?

PRODUCT	SMARTCRAFT	GASOLINE SINGLE ENGINE	GASOLINE TWIN ENGINE
6100i	✓		
M SERIES	✓	✓	✓
EXPLORER SERIES	✓	✓	✓
EXPLORER F210		✓	

PRODUCT	PART
FUEL TRANSDUCERS	
Single engine fuel kit	AA002277
TWIN ENGINE (STANDARD)	
Twin engine fuel kit	AA002275R
CABLE & FUEL KIT	
Tri-cable required to connect fuel transducers to Explorer 660, 657, 650 only	AA002458
Fuel splitter kit to connect fuel transducers to two displays	AA002405

Gasoline fuel sensors are suitable for the following engines:

Engine Type	Range
Carburetted 2-stroke and EFI * Outboards	50 - 300 hp
4-stroke outboards	90 - 300 hp
Inboard engines	70 - 450 hp

* Will not work with EFI engines that have a return fuel line.

M SERIES MULTIFUNCTION DISPLAYS

M121, M84: "WHAT OTHERS CONSIDER OPTIONS, NORTHSTAR CONSIDERS STANDARD EQUIPMENT."

NORTHSTAR M121 ▶

◀ NORTHSTAR M84

12.1" DISPLAY

8.4" DISPLAY

HD Digital Radar, A.I.S. & Video functionality

The ground-breaking M Series deliver navigation confidence with Northstar's High Definition Digital Radar System, allowing you to detect weather fronts and potential sea hazards. AIS brings boat identification to radar or chart.

The M Series feature video input capability from any video output device such as aft deck or engine room cameras, DVD players, or underwater cameras.

LOW PROFILE, HIGH FUNCTIONALITY… M121 & M84

Northstar's M Series are low-profile, multifunctional units that integrate GPS, radar, sonar, AIS, and fuel management and video functionality into a daylight viewable high-resolution screen.

The M Series excel as complete navigation packages for boats of all sizes. Northstar High Definition Digital Radar combined with C-Map cartography provides a comprehensive array of navigational aids, including chart overlay (optional heading sensor required).

M SERIES FEATURES

CHART

Northstar's embedded background chart gets you started for global navigation, or add C-Map's NT MAX™ card for detailed chart data, value-added port info and land detail.

HD DIGITAL RADAR

Northstar High Definition Digital Radar brings advanced digital signal processing, better target presentation, better clutter rejection with your optional Northstar Digital Radar system (see page 12).

AIS

Optional Automatic Identification System receivers display vital vessel information from registered vessels on the chartplotter screen (See page 19 for "What is AIS?" and software upgrade information).

SONAR

Equipped with a powerful 1 kW (RMS) sounder that automatically adjusts the output power (1 kW or 600 W) to match the wattage of your transducer. No separate sounder processor is required. Simply plug any compatible transducer and you are up and running.

FUEL MANAGEMENT

On-demand access to your engine's gasoline performance data, as well as SmartCraft™ management for SmartCraft-enabled Mercury, Mariner or MerCruiser engines (optional fuel kit / SmartCraft™ gateway required).

VIDEO (NTSC/PAL)

Northstar brings video to your helm. Connect a camera for deck monitoring, engine room surveillance, even underwater views. Or connect a DVD player or camcorder for entertainment (a separate audio output system is required for sound).

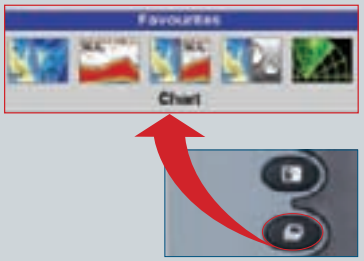

▲ONE TOUCH SCREEN SELECTION

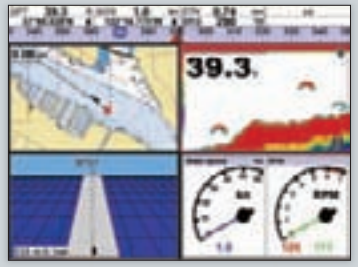

▲CHART + SMARTCRAFT + SOUNDER + HIGHWAY SPLIT SCREEN

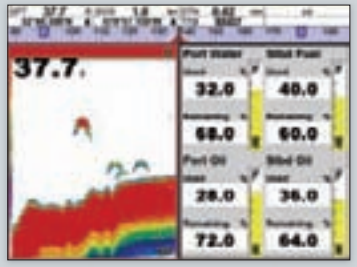

▲SONAR + FUEL SPLIT SCREEN

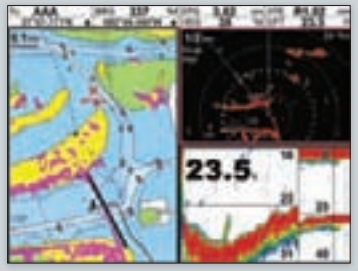

▲CHART/RADAR OVERLAY + RADAR + SONAR SPLIT SCREEN

M SERIES SUMMARY	M121	M84
Screen Size (diagonal)	12.1" (304 mm)	8.4"(213 mm)
Daylight viewable color screen (pixels)	800 x 600	800 x 600
C-MAP NT MAX™ Cartography	✓	✓
Radar-Ready	✓	✓
AIS-Ready†	✓	✓
Video-Ready	✓	✓
Dual Frequency 50 / 200 kHz	✓	✓
1 kW/ 600 W auto-detect	✓	✓
Depth Range (with recommended transducer) 2 - 2000 ft (0.6 - 600 m) **		
Gasoline Fuel computer option *	✓	✓
SmartCraft™ (for Mercury digital engines) *	✓	✓
Track-Your-Buddy (with Explorer 721)	✓	✓

MODEL	PART
M84	
Head + GPS antennna	NS006634
M121	
Head + GPS antenna	NS006624

* Requires optional fuel kit / SmartCraft™ gateway

** Depth capabilities depend on type of transducer used, installation and water clarity. Depth to 3300 ft (1000 m), may be achieved under optimal conditions and using a 1000 W dual element transducer. Refer to transducer section for information on maximizing your transducer performance.

† AIS Requires separate AIS receiver hardware.

OPTIONS & ACCESSORIES	PART
FOR M SERIES	
Aquaducer tri-function 50/200 kHz, transom mount	AA002077
Single engine gasoline fuel kit	AA002277
Twin engine gasoline fuel kit *	AA002275
SmartCraft™ gateway, single engine	NS005020
SmartCraft™ gateway, twin engine	NS005021
AIS Y-Cable NMEA/FUEL & SMARTCRAFT/NAVBUS	AA002464

Note: More transducer options available (see page 42 for more information).

CARTOGRAPHY

NORTHSTAR EXPLORER AND M SERIES

Northstar Explorer & C-Map the Perfect Combination

The best chartplotters deserve the best electronic charts and so it is no surprise that Northstar chose C-Map technology to power their systems.

All Northstar Explorer chartplotters feature C-Map MAX cartography. Imagine a complete portfolio of hundreds of paper charts, tide tables, pilot books, road maps and photos all squeezed in to a memory card the size of a postage stamp. Simply insert the MAX cartridge into the chartplotter and all of this information is just a button push away, instantly displayed, the moment you need it.

- Get stunning "paper chart" like presentation, in 2D or 3D perspective modes
- See dynamic nav-aids that flash in the correct sequence, illuminate when you are within range and display the correct sector color based on your boat's position
- Know what the tide is doing with animated tidal flow arrows and accurate tidal height graphs
- View aerial photos of unfamiliar harbor inlets or marina layouts and query our extensive C-Marina database of port services and Points of Interest.

C-MAP NT MAX FEATURES: FOR M SERIES AND EXPLORER SERIES NAVIGATION PRODUCTS

Advanced Port Info

Photos and extensive notes on all popular marinas and ports

Land Data

Street level mapping of all harbours and coastal areas, with land elevations and Points of Interest

Tidal Streams

Intuitive colored arrows that show strength and direction of tidal currents

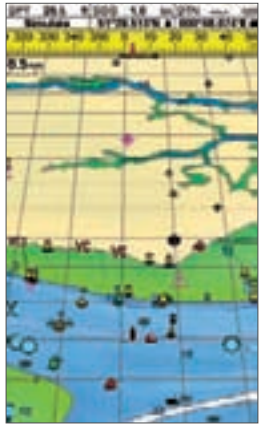

Perspective View

Close areas are enlarged for detailed inspection

WHAT IS AIS?

AUTOMATIC IDENTIFICATION SYSTEM...

AIS is a way of identifying another vessel's position, course and speed (along with other details like name and freight). This information is displayed on your chartplotter.

The M121, M84 Explorer 657, 567 and 557 support AIS; offering you the ability to bring this important navigation and safety aid to your vessel.

HOW DOES IT WORK?

All AIS information is transmitted by vessels equipped with AIS transponders, a unit able to transmit as well as receive AIS data. Transmitting vessels tend to be commercial ships legally required to transmit AIS data.

Your AIS receiver listens to those transmissions. The receiver sends appropriate data to your AIS-compatible display and it's then presented on your chart.

Once received, this information is plotted onto your chart. This provides invaluable information that works alongside radar to clarify targets and provide extra protection against potential collisions.

WHY DO I NEED TO RECEIVE AIS INFORMATION?

Due to VHF's longer wavelength, AIS has particular use in identifying targets that may be obscured by poor visibility, or behind larger targets like low islands and large ships that radar can't penetrate.

AIS-READY PRODUCTS
M Series M121, M84 (M Series requires cable AA002464)
Northstar Explorer 657, 567, 557 (Explorer requires cable AA002458)
AIS TRACKING
This service is a growing necessity for navigation. AIS receivers reveal AIS-transmitting ships on your display, bringing additional safety information to your helm.

Note: Contact your Northstar dealer for compatible AIS receivers

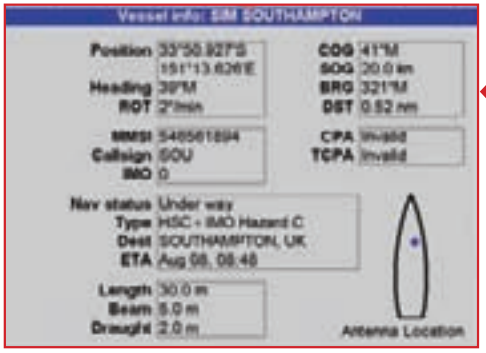

Placing the cursor over the AIS target and pressing ENTER displays complete AIS vessel information as shown above.

Take advantage of Northstar's new color coded AIS targets and comprehensive data screens. Northstar's new plotting implementation is exceptionally thorough. Also note that AIS text messages can be read, a full target list is available, and alarms can be set on both CPA and proximity. Plus you can choose to have each target project its course based on time (two minutes to two hours).

AUTOPILOT SYSTEMS

AP380, NS3300

A rate gyro is standard with every Northstar Autopilot. This daylight viewable color TFT display provides crystal-clear information on heading status and key pilot data. See and feel the difference that a gyro stabilized pilot can make to your power or sail boat.

Northstar autopilots are serious blue water tools that provide total reliability and performance whether you are crossing the bay or crossing an ocean

NORTHSTAR NS3300 ▲

NORTHSTAR EXPLORER AP380 ▲

3.8" DISPLAYS

NORTHSTAR AUTOPILOT FEATURES:

- Rotary control dial
- One button dodge and jog keys
- Selection of tack, gybe, 90 and 180 degree turns
- Autopilot solid state rate gyro supplied standard for maximum course stability.
- Steer to wind angle, compass heading or GPS waypoint at the press of a button.
- Dodge obstructions with a simple button press.
- Auto Tack tacks the boat through a preset angle.
- Auto Cal allows for automatic correction of deviation errors.
- Interfacing with either Northstar's proprietary NavBus protocol or industry standard NMEA 0183.
- Info data is displayed in clear, large formats.
- Auto diagnostics continuously monitors all components in the Autopilot.

WHAT IS A RATE GYRO?

Northstar's Rate Gyro is a rate-of-turn sensor that provides a superior means of monitoring a vessel's heading. Changes in boat heading (yaw) are instantaneously measured and corrected by the Pilot's rudder control. With Northstar's autopilots, the gyro is used in conjunction with a fluxgate compass to provide accurate steering on all vessels, by minimizing rudder movement and as a result reducing fuel costs.

The master dial provides simple, precise access to course setting and menu items. Port and starboard LED's* indicate course adjustments.

At a single glance from across the cockpit, the skipper gets general steering confirmation, even at night.

One-button dodge and jog keys, easy selection of 90° / 180° turns, tack / gybe selection, on-screen animations of the vessel's intended actions and progress through a turn: the Northstar Autopilots make controlling your boat a breeze.

*Course adjustment LED's are only available on the AP380

MODEL	PART
Northstar AP380 Head Only	NS003360
Northstar NS3300 Head Only	NS002881
Northstar Standard Core Pack	NS002874R
Northstar Verado Core Pack	NS002876R

ONE TOUCH ACCESS TO CORE FUNCTIONS

DISP

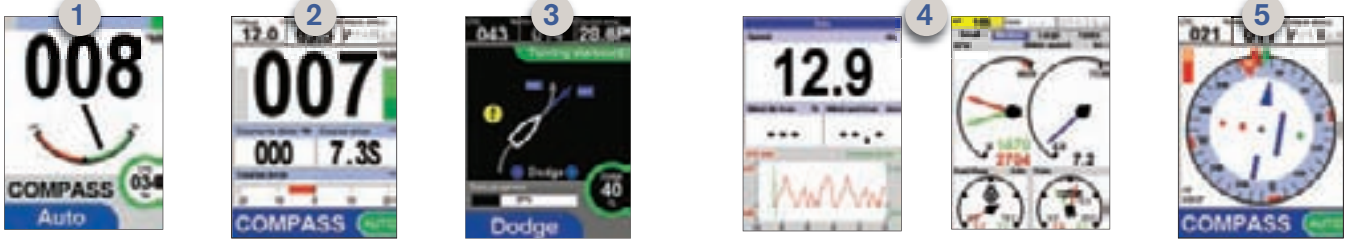

1. Simple Compass mode with rudder angle indicator.
2. PILOT mode with configurable data fields to display Autopilot or NavBus information.
3. Dodge Screen with animated boat demonstrating real-time turn progress.

The AP380 and NS3300 are true multi-function displays.

4. Complete repetition of all NavBus and SmartCraft™* data.
5. Aviation-style analog compass display with central deviation bar that shows course error, cross-track error or rudder position.

*SmartCraft™ data only available on the AP380

EASY "WIZARD" STYLE CONFIGURATION

Installation and configuration wizards eliminate configuration complexity. Clear, on-screen graphics walk you through calibrations, such as rudder and compass.

NORTHSTAR AUTOPILOT CORE PACKS:

MERCURY VERADO

Choose between standard Core Pack and Verado Core Pack.

- Standard Core Pack includes :
  (a) Course Computer
  (b) Fluxgate Compass and Rate Gyro,
  (c) Robust hall-effect Rudder Feedback Unit
- Verado Core Pack includes:
  (a) Course Computer
  (b) Fluxgate Compass and Rate Gyro and the Mercury Verado adapter kit. The Verado adapter kit combines the best of engine performance and navigation control. The Verado adapter kit contains: Cables, connectors and attachments engineered for Mercury Verado engines.

A)

B)

C)

BUILDING YOUR AUTOPILOT SYSTEM

AP380, NS3300

CHOOSE YOUR AUTOPILOT CONTROL HEAD (SEE PAGE 20)

AP380

NS3300

CHOOSE YOUR CORE PACK (SEE PAGE 21)

Standard Core Pack

Verado Core Pack

CHOOSE YOUR DRIVE SYSTEM (SEE PAGE 23)

COMBINE YOUR AUTOPILOT WITH OTHER NORTHSTAR DISPLAYS

8000i

6100i Series

M Series

Explorer Series

STEERING SYSTEM

AUTOPILOT DRIVE SELECTION CHART

Northstar autopilots are designed to work with all kinds of systems. However the above G-PILOT solutions are a guide only and it is recommended that you contact a marine specialist prior to any installations.

- Hydraulic (Power/Sail)
  - Cylinder Capacity
    - <250 cc <15.3 ci → Reversing Pumps AA002426
    - <500 cc <30.5 ci → Reversing Pumps AA002427
    - >500 cc >30.5 ci → Continuous Running Pumps AA002447
- Mechanical (Sail)
  - Boat Size
    - <10 m <40 ft → Mounted AA002411 Remote AA002422
    - <12 m <45 ft → Mounted AA002423 Remote AA002424
    - <18 m <60 ft → Remote AA002425

HYDRAULIC REVERSE PUMPS - ADJUSTABLE FLOW

Part No.	Pump (for hydraulic steering)	Max Flow Rate	Max cylinder capacity	Type of Boat
AA002426	Hydraulic	1.2 1 / min	250 cc	power / sail
AA002427	Hydraulic	21 / min	500 cc	power / sail

HYDRAULIC LINEAR DRIVES FOR MECHANICAL STEERING SYSTEMS

Part No.	Thrust	Stroke Length	Bore	Style	Type of Boat
AA002411	880 lb / 400 kg	7.12“ / 178 mm	1.52” / 38 mm	Mounted	Sail Boat < 45' (8 m)
AA002422	880 lb / 400 kg	7.12“ / 178 mm	1.52” / 38 mm	Remote	Sail Boat < 45' (14 m)
AA002423	880 lb / 400 kg	12.2“ / 305 mm	1.52” / 38 mm	Mounted	Sail Boat < 60' (18 m)
AA002424	880 lb / 400 kg	12.2” / 305 mm	1.52” / 38 mm	Remote	Sail Boat < 60' (18 m)
AA002425	1320 / 600kg	12.2 “ / 305 mm	1.8” / 45 mm	Remote	Sail Boat < 70' (21 m)

SYSTEM OPTIONS

Integrate the Northstar autopilot system with virtually any steering system. Examples below show most common systems with pump options listed.

Hydraulic Steering Power/Sail Boat

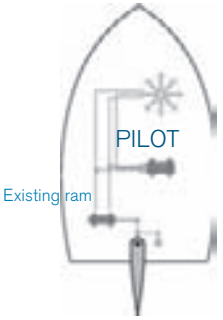

A discrete pump/ cylinder based system.

Mechanical Steering Sail Boat

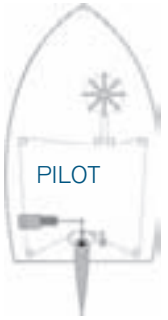

An integrated pump/cylinder based system.

Electric Motor Steering Power/Sail Boat

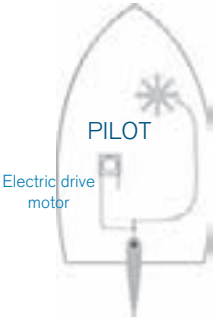

An electric motor drive-based system.

COMBO UNITS

650, 657, 660

Compact and powerful, the Northstar Explorer Series Combo Units are user-friendly versatile on-board information systems.

Explorer Combo units have built-in background maps with high level cartographic detail and the option of employing C-MAP NT MAX™ charting technology. If there are fish to be found, you'll find them with an Explorer Combo unit from Northstar.

EXPLORER COMBO FEATURES:

TRACK-YOUR-BUDDY

When connected with the Explorer 721 VHF, you can automatically plot the position of your DSC radio-equipped boating buddies.

FISH LIKE THE PROS…

High vertical pixel count plus 100X zoom functions mean you can see bottom structure detail like never before. Fish inshore or offshore with the dual frequency sounder and 600 Watts of output power.

FUEL MANAGMENT

Explorer Chartplotter/Fishfinder Combos are the perfect devices for managing important fuel consumption and economy information to help you get the best performance year after year.

C-MAP FOR ALL

All units run C-Map NT MAX™ cartography, with enhanced port details, tidal overlays, location photos and comprehensive chart info.

EXPLORER 657

Northstar's 5" high resolution VGA Chartplotter/ Fishfinder combo with Fuel Management and AIS functionality.

The built-in worldwide background map still offers reliable entry-level use, waiting to be enhanced with C-Map's latest cartography: NT MAX™. With a 640 x 480 pixel screen, your display becomes 4 times sharper than the Explorer 650, being a truly impressive, bright and highly functional addition to your boat.

With a range of optional fuel add-ons, the Explorer 657 is a powerful travel tool for your boat.

5" DISPLAY

EXPLORER 650

The affordably priced 650 offers the same multifunctional features as the larger Explorer 660 in a 5-inch, 320 x 234 pixel display.

All the great Northstar chart, sounder, SmartCraft™ and fuel options are provided with a fantastic selection of split and full screen options. C–Map's NT MAX™ cartography, including port info, tide flow, perspective views and land data, is fast and clear. The PAGE key provides quick access to 3 preset and 3 favorite displays.

The Explorer 650 has full integration with the Explorer 721's Weather Watch functions: temperature, barometer and fishing conditions are echoed to your Explorer 650 in blazing color.

5" DISPLAY

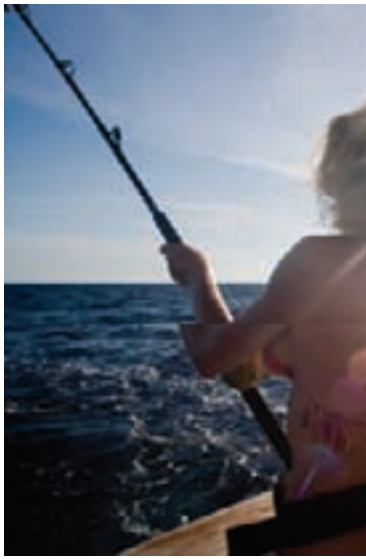

EXPLORER 660

The vertical format of the Explorer 660 optimizes the boater's forward visibility when navigating, and in sounder mode, takes advantage of the 800 vertical pixels for unbelievable clarity through the water column.

7" DISPLAY

MODEL	PART
EXPLORER 650	
with 124 GPS antenna + 50/200 kHz transom transducer	NS006611
with 124 GPS antenna*	NS006614
EXPLORER 657	
with 124 GPS antenna + 50/200 kHz transom transducer	NS006641
with 124 GPS antenna*	NS006644
EXPLORER 660	
with 124 GPS antenna + 50/200 kHz transom transducer	NS006601
with 124 GPS antenna*	NS006600

* See page 42 for transducer options.

OPTIONS & ACCESSORIES	PART
FOR EXPLORER 660, 650 & 657	
Single engine gasoline fuel kit	AA002277
Twin engine gasoline fuel kit *	AA002275
SmartCraft™ gateway, single engine	NS005020
SmartCraft™ gateway, twin engine	NS005021
Tri-Cable for GPS/AIS/FUEL for 657 and 650	AA002458
Rail mount bracket for Explorer 650 or 657	AA002295
Rail mount clip for GPS antenna	AA002296

COMBO UNIT SUMMARY	650	657	660
Screen size (diagonal)	5" (127 mm)	5" (127 mm)	7" (178 mm)
Daylight viewable color screen (pixels)	320x234	640 x 480	800 x 480
C-MAP NT MAX™ Cartography	√	√	√
Dual Frequency 50 / 200 kHz	√	√	√
600 W RMS (4800 W peak to peak)	√	√	√
Depth Range (with recommended transducer)		√	√
Gasoline Fuel computer option *	√	√	√
SmartCraft™ (for Mercury digital engines) *	√	√	√
Track-Your-Buddy (with Explorer 721)	√	√	√
Weather Watch (with Explorer 721)	√	√	√
AIS†	x	√	x

* Requires optional fuel kit / SmartCraft™ gateway
** Depth capabilities depend on type of transducer used, installation and water clarity. Depth to 3300 ft (1000 m), may be achieved under optimal conditions and using a 1000 W dual element transducer. Refer to transducer section for information on maximizing your transducer performance.
† Requires AIS reciever

CHARTPLOTTERS

567, 557, 550(i)

Navigation is easy with Northstar's Explorer Series dedicated chartplotters…

A simple-to-use menu structure and superb daylight viewable screen means you can enjoy your voyage whether it's across the bay or across an ocean. Rugged and waterproof, the Northstar Explorer is a brilliant choice for your navigation needs.

EXPLORER CHARTPLOTTER FEATURES:

READY-TO-GO AIS CAPABILITY

Automatic Identification System (AIS) is ready-to-go on the 567 and 557, allowing you to identify and avoid AIS-transmitting vessels in hazardous visibility conditions.

See page 19 for more information.

FUEL MANAGEMENT

Every Northstar Explorer series chartplotter has a built-in fuel computer. Just purchase the optional fuel kit to display fuel management data such as fuel flow, fuel remaining, estimated range and fuel economy.
A graphical fuel gauge complements this digital information,

Northstar Explorer series chartplotter come SmartCraft™-ready - a fantastic feature for boats with compatible Mercury, MerCruiser and Mariner engines.

EXPLORER 557

The built-in 32 MB regional background map on the Explorer 557 still offers reliable entry-level use, waiting to be enhanced with C-Map's latest cartography: NT MAX™.

With a 640 x 480 pixel screen, chart display becomes 4 times sharper than the 550, making the 557 very easy on the eye.

5" DISPLAY

EXPLORER 550

The Explorer 550(i) presents large screen functionality at an attractive price. Powerful C-MAP NT MAX™ features are brought to life on the 5" 320 x 234-pixel daylight viewable color screen.

With fuel computer software installed, the Explorer 550(i) offers a complete fuel management system for gasoline or SmartCraft™ enabled engines.

The 550(i) comes in two types: internal GPS receiver or external. These great chartplotters are perfect for boats of all sizes.

5" DISPLAY

MODEL	PART
EXPLORER 567	
with 124 GPS antenna	NS002941
EXPLORER 557	
with 124 GPS antenna	NS002911
EXPLORER 550(I)	
550i - integrated antenna	NS002965
550 - with 133 GPS antenna	NS002961
ACCESSORIES	
Rail mount bracket for Explorer chartplotters	AA002295
Rail mount clip for GPS antenna	AA002296

* Requires optional fuel kit/SmartCraft™ gateway; see pages 14-15 for details
** Requires input from Explorer 721; see page 30 for details
‡ Products with integrated antennas can only be bracket mounted.

EXPLORER 567

The Explorer 567 offers the ultimate in dedicated Northstar Chartplotters - a full 6.4" VGA ultra-bright screen for critical detail close to shore.

The 567 offers enhanced AIS and fuel management capabilities as well as the opportunity to add fantastic NT MAX™ cartography from C-Map.

Northstar's ease-of-use philosophy is lead by the Explorer 567's user interface design. The intuitive MENU key uses situation logic to display options dependent on the current situation. Have you just set a waypoint? Then the first menu option is GOTO.

Here at Northstar we call it the "Smart Key" because it knows what you are doing and offers the logical choice for all situations.

Match this unit with the Explorer 467 for a big twin screen chart/fish set-up.

6.4" DISPLAY

CHARTPLOTTER SUMMARY	567	557	550(I)
Screen size (diagonal)	6.4" (163 mm)	5" (127 mm)	5" (127 mm)
Screen resolution (pixels)	640x480	640 x 480	320 x 234
Color screen	√	√	√
Split-screen View	√	√	√
Integrated Antenna option (i)	–	–	√
Bracket or bulkhead mount	√	√	√ ‡
Tracklogs (1 x 2000 and 4 x 500 waypoints)	√	√	√
Routes (50 waypoints each)	25	25	25
Alpha-numeric waypoints	3000	3000	3000
Multi lingual menu option	√	√	√
NavBus / NMEA interface	√	√	√
C-Map Cartography	NT MAX™	NT MAX™	NT MAX™
Gasoline Fuel computer option *	√	√	√
SmartCraft™ Fuel Management *	√	√	√
Weather Watch (see VHF section) **	√	√	√

FISHFINDERS

If there are fish to be found, you'll find them with a Northstar Explorer dedicated fishfinder.

Northstar's Explorer range of color fishfinders have sophisticated sounder technology. With our ease-of-use engineering, , in a range of sizes and single/dual frequency combinations to suit your needs. Our bright HI-RES displays boast 640X480 pixels making these dedicated fishfinders a stunning addition to a boat of any size.

EXPLORER 467

The Explorer 467 delivers powerful dual frequency performance on an incredible 640 x 480 pixel, 6.4"color display.

The 467 has numerous sounder display options including split and full screen zoom, A-scope and a choice of white, blue or black background. There's also a choice of color palettes to highlight bottom structure or help identify a particular fish species.

When purchased with an optional fuel kit, the Explorer 467 will let you track and display fuel data on screen.

Its state of the art digital sonar technology delivers incredible target detail and high definition bottom structure in shallow and deep water.

6.4" DISPLAY

EXPLORER 457

Like its big brother the Explorer 467, the 457 reveals water column detail like never before, thanks to dual frequency sonar paired with an outstanding 640 x 480 pixel color display. The 457 maximizes helm space and value, by putting all that power in a 5" screen.

Having a dual frequency fishfinder allows you to select optimum performance for either deep or shallow water. As well as the standard mixed frequency display, the Explorer 467 and Explorer 457 allows you to select either a narrow beam or a wide angle beam.

5" DISPLAY

FISHFINDER SCREENS

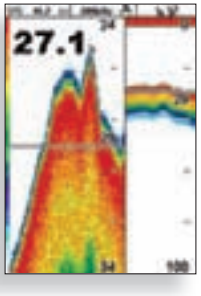

ZOOM SCREEN

This display is a split screen view (with the right showing the full range and the left a zoom section). The Explorer, 457 and 467 also feature a full screen view option.

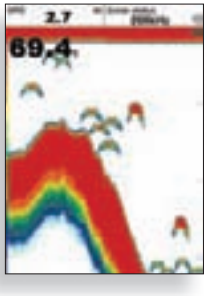

FISH HISTORY

Displays echoes received over time, with the most recent events on the right of the screen. The Explorer 467 and 457 can scroll back to review past history.

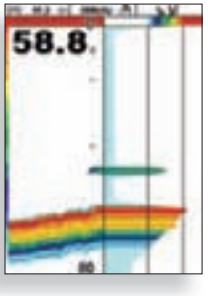

SONAR SCREEN / A–SCOPE FUNCTION

Displays the strength and depth of the echoes returned from each ultrasonic pulse. Can also be used for manually setting the gain and adjusting the signal strength for the white line display on the Fish History and Zoom screens.

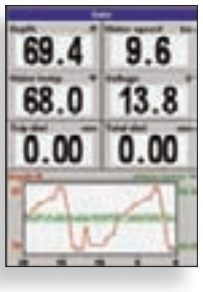

DATA SCREEN

User-configurable display for a wide range of data choices. This also displays a graph of temperature history

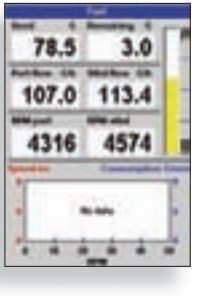

FUEL SCREEN

Displays fuel consumption, fuel used, fuel remaining, fuel economy, boat speed and water depth. Fuel screen will be displayed on the main menu only if the fuel option has been enabled.

CHARTPLOTTER SUMMARY	467	457
Screen size (diagonal)	6.4" (167 mm)	5" (127 mm)
Screen resolution (pixels)	640 x 480	640 x 480
Frequency (kHz)	50 / 200	50 / 200
Output Power RMS (W)	600	600
Depth (m / ft)	600 / 2000	600 / 2000
Fuel Computer	✓	✓
Speed with Log	✓	✓

MODEL	PART
EXPLORER 467	
with 50/200 kHz transom mount aquaducer - depth, temp and speed	NS006211
Head unit *	NS006210
EXPLORER 457	
with 50/200 kHz transom mount aquaducer - depth, temp and speed	NS006201
Head unit*	NS006200
ACCESSORIES	
Rail mount bracket for Explorer fishfinders	AA002295
Trolling motor mount bracket	AA002074

* See page 42 for transducer options

GETTING THE BEST PERFORMANCE FROM YOUR FISHFINDER

INSUFFICIENT GAIN:

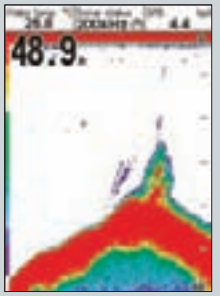

In the example, the bottom echo does not display enough information to judge the bottom hardness and the snags echo is so weak as to appear as part of the bottom sounding. There are no visible fish echoes.

EXCESSIVE GAIN:

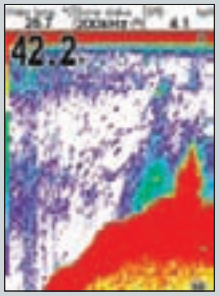

This screen is cluttered with echoes from particles in the water column. The bottom display is blocked out showing no detail and the snag (an old tree) is displayed as part of the bottom.

CORRECT GAIN:

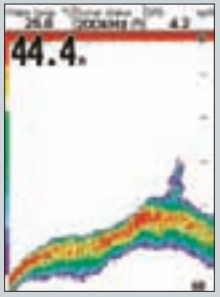

Using the correct gain setting the screen is still clean, however fish echoes are clearly displayed.

VHF RADIOS

NORTHSTAR EXPLORER: 721, 710, 701
NORTHSTAR NS100

Whether your boating is a day-trip to a nearby fishing location or a coastal voyage of several days, you can't beat the dependability of Northstar's radios.

Northstar's range of VHF radios are built to the same robust standard of performance as the rest of our marine products. Exceptionally clear audio is provided via a powerful front facing speaker and a separate external speaker amplifier drives four watts of output. Both the unit and handset are rated JIS7 water-resistant, so your Northstar radio will continue to perform under extreme conditions.

TRACK YOUR BUDDY FOR NORTHSTAR EXPLORER 721

Track-Your-Buddy is for safety, teamwork, convenience or just for fun.

It allows you to combine your Northstar 721's DSC position polling with Track-Your-Buddy enabled Chartplotter or Combo units to show the location of up to three boating friends on the chart display.

It's easy to setup: You need a Northstar 721, the MMSI number of your buddies' DSC enabled VHF radio, and a Northstar Track-Your-Buddy capable unit.

A great function for fleet voyages or any application where knowing the location of your boating partner is important.

WEATHER WATCH / FISH FORECASTER FOR EXPLORER 721

Unique to Northstar's Explorer 721 is barometric weather forecasting. Barometric pressure is presented using highly accurate digital graph technology so you can see the current reading and trends to assist in determining rapid changes in air pressure.
Going fishing? Check the 4-level "Happy Fish" icon on the LCD to determine the likelihood of good fishing conditions.

EXPLORER 721 & EXPLORER 701 + OPTIONAL 2ND STATION HANDSET

We've designed the 721 model with ease-of-use in mind. The very large display ensures a host of important information is clearly viewable. Keep track of barometric pressure, fishing conditions, and with four lines of text, you can easily view DSC messages, boat position, time and channel name. This model also features the option of a second station handset (the 701). Ideal for fly-bridge, sailboat cockpit or anywhere a second VHF station is useful.

The second station mic for the VHF 721, features the same large LCD and complete control of all DSC and radio functions. Use the Intercom function to communicate between the base and the second-station handset. The handset is rated JIS7 water-resistant to withstand the tough marine environment.

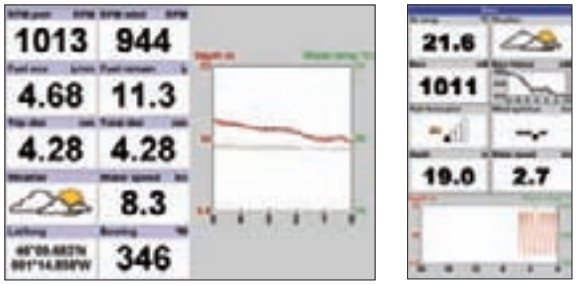

▲ Weather Watch/ Fish Forecaster screen displays on an M Series and Explorer Navigation products

EXPLORER 710

The Northstar Explorer 710 is fully DSC capable and features call logs with instant call back capability. The large LCD presents 4 lines of text to display channel names, GPS position, GPS speed, GPS course or time, and DSC messages.

- Large display 1.8" x 1" (46 x 26 mm) with four lines of text (12 characters per line).
- Program three favorite channels for easy selection.
- Call logs with instant CALL BACK capability.
- Automatic GPS boat position and time when connected to a GPS receiver.

NORTHSTAR NS100

The Northstar NS100 marine VHF DSC radio, available in single and dual station models, combines the ease-of-use and peace-of-mind you expect from Northstar and provides a wealth of useful features.

- The latest DSC SC-101 (US) or Class-D (EU) functions.
- Dedicated distress call button automatically transmits MMSI (Maritime Mobile Service Identity) and position until an acknowledgement is received.
- Alphanumeric handset with built-in screen for easy operation and information display.
- Access to all available marine VHF channel banks including weather.
- Adjustable contrast on the handset LCD and adjustable backlighting on for low and no light use.

The dual station model also offers:

- Second alphanumeric handset
- Intercom capabilities between handsets
- Foghorn mode
- Hailer function

DSC – INSTANT DISTRESS CALLS & DIGITAL MESSAGING

Digital Selective Calling is a component of the international distress and safety system GMDSS (Global Maritime Distress and Safety System). When connected with a GPS, the time, precise location and unique ID of the vessel in trouble is broadcast when the DISTRESS button is pressed. When GDMSS is fully implemented, Channel 16 will not be required to be monitored. Small boats without a DSC equipped radio could find that no-one is listening for their
distress call.

With DSC, the boater can also send and receive messages digitally. You can efficiently transmit and receive communications between one selected vessel, a group of vessels or ship-to-shore. To do this, each user will be assigned a unique MMSI (Maritime Mobile Service Identity) number that will allow users to dial a specific location, similar to dialing a telephone number.

MODEL	PART
NORTHSTAR NS 100	
NORTHSTAR NS 100	NS009519 (US) NS009520 (EU)
NS100DS VHF dual station radio	NS009521 (US) NS009522 (EU)
NS100HS 2nd station handset	NS009523 (US) NS009524 (EU)
NORTHSTAR EXPLORER 710	
Base station with mic, bracket and flush mount kit, external speaker cable, COM cable and dust cover	NS009507 (US) NS009508 (EU)
NORTHSTAR EXPLORER 721	
Base station with mic, bracket and flush mount kit, external speaker cable, COM cable and dust cover	NS009528 (US) NS009529 (EU)
NORTHSTAR EXPLORER 701	
2nd station handset for Northstar Explorer 721	NS009555 (US) NS009560 (EU)

VHF ANTENNAS

171, 177

Northstar's innovative VHF antennas are not only tested in the most extreme conditions but also pass the rigorous International Standard for salt mist exposure. With this kind of durability and reliability built-in, you can enjoy years of trouble free performance.

Northstar's 171 and 177 antennas feature a uniquely designed quick-fit "no cable" mount system that enables the antenna to be simply unscrewed from the base, leaving the coaxial cable attached to the mount. This means the antenna can be removed quickly and conveniently without the hassle of dealing with the cable. You can keep your antenna safely stored when not in use or remove for travel, adding years to the life of the antenna.

171 VHF Antenna (2.5m "ultraglass" quick-fit)

177 VHF Antenna (1.1m "ultraglass" quick-fit)

171 VHF Antenna Quick-fit Mount (stainless steel)

177 VHF Antenna Quick-fit Mount (nylon)

MODEL	PART
171 VHF Antenna	NS000355
171 VHF Antenna Quick-fit Mount	AA000224
177 VHF Antenna	NS000358
177 VHF Antenna Quick-fit Mount	AA000226

GAUGES

F210

The Northstar F210 boasts big bold digits, ultrawide viewing angles and high-contrast screens.

The F210 delivers the information you need at a glance in any weather and with four levels of backlighting.

MODEL	PART
FUEL 210	
with single engine fuel kit	NS004551

FUEL 210 FEATURES

Northstar's compact dedicated fuel solution for single engine applications:

- Instant fuel flow: 1.3 to 36 US gallons/ hour, 2.5 to 130 Liters/ hour.
- Trip and total fuel consumption, user resettable, up to 999 units.
- Volume remaining in tank (provided that the total tank volume has been entered).
- Low fuel alarm.

DEPTH 210 FEATURES

Northstar's DEPTH 210 sounder can also be configured to operate as a repeater, allowing multiple depth instruments to be mounted on a single vessel. In this mode it displays depth information from any other instrument sending NMEA 0183 depth data, including another Northstar Depth Sounder.

GAUGING YOUR FUEL USAGE IS SIMPLE WITH NORTHSTAR

Installation is a simple process with no need for underfloor tank access.

Gasoline fuel sensors are not suitable for EFI engines that have a return fuel line.

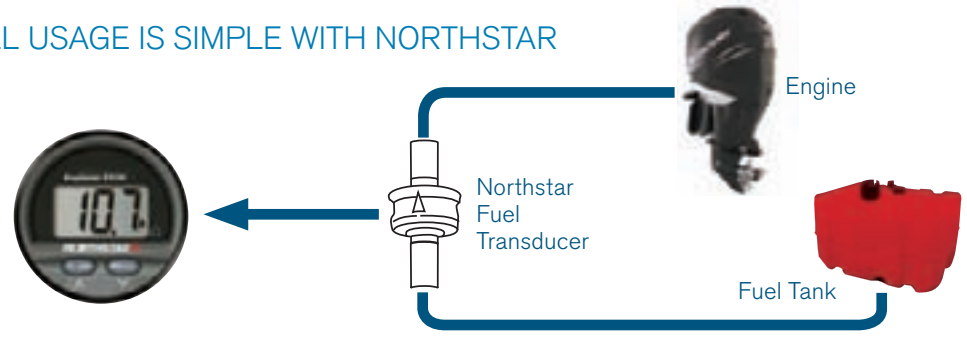

SPECIFICATIONS

8000i AND 6100i

PHYSICAL / DIFFERENCES	8000i 15" MONITOR	8000i BLACK BOX PROCESSOR	8000i 12" SYSTEM	6100i
Screen size	15"	N/A	12.1"	6.4", 8.4", 10.4", 12", 15"
Pixel dimensions	1024 x 768 (XGA)	Supports SVGA (800x600) and XGA (1024 x 768) monitors	800 x 600 (SVGA)	6.4", 8.4", 10.4" (640 x 480), 12.1" (800 x 600), 15.1" (1024 x 768)
Mounting	12 mm flush mount	N/A	12 mm flush mount	6", 8", 10" (Bracket or flush mount) 12", 15" (Flush mount only)
Weight of the unit unpacked	4.5 kg	3 kg	5 kg	6.4" (5.3 kg), 8.4" (7.5 kg), 10.4" (9.2 kg), 12" (11.8 kg), 15" (14.3 kg).
Keyboard	Keypad to control the monitor settings (not the application)	Remote keypad	Built in keypad	Built-in keypad
Power consumption	25 W	20 W	25 W	6.4" (20.4 W), 8.4" (21.6 W), 10.4"(38.4 W), 12"(31.2 W), 15"(39.6 W)
Touch screen	Yes (Infra red technology retains full sunlight viewability)	N/A	Yes	No
NMEA Input	N/A	GGA, VTG, ZDA, DBT, GSA, GSV, HDM, HDT		SGR, GTD, SRS, RMA, WPL, GLL, VTG, TLL, HDG, HDT, OSD, HCC, HCD, HDM, DBT, DPT, VHW, MTW
NMEA Output	N/A	APA, APB(M), APB(T), BOD, BWC, DBT, DPT, GGA, GLL, HDG, HDM, HDT, RMB, RMC, VTG, XTE, ZDA		APB, BOD, GLC, GLL, GSA, GSV, LCD, HSC, MSS, RNN, RMC, RMA, RMA, VTG, WVC, XTE, ZDA, ZTG
Interface	2 x VGA, 2 x BNC, 1 x DVI-D, 2 x S video output	NMEA (1 in, 1 out), GPS, USB2 x 2, Stereo Line out via RCA, Standard VGA out, 1 x Ethernet		2 bi-directional NMEA I/0 ports, 1 aux port, 1 bi-directional RS-232 port 200 PPNM speed output or ext- alarm output Standard 15 pin VGA output, NTSC/PAL video input.
Split screens	N/A	2,3, 4 way, or 3 plus one thumbnail		2 way, 3 way
Functions	N/A	Chartplotter, Radar, Fishfinder, instrumentation, Music, CD player, Video Jukebox, DVD, CD player, Video Input, Network, Cameras		Chartplotter, Radar, Fishfinder, Video Input, and Weather Data
Number of displays	N/A	Up to 6 autonomous displays		Up to 5
Supply voltage	10-34 V DC			10-36 V DC
Compliance	CE, C-Tick, ISO 7637 part 2			CE
Environmental	-10 to 55 ° C Operating temperature			0-55 ° C max 95 % relative humidity
Network speed	100Mbits/second			
Languages	English			
Waterproof rating	IPx6			

CHARTPLOTTER	8000i	6100i
Cartography	C- Map NT MAX Pro	Navionics Platinum, Platinum+, Gold, Gold+, Silver
Built-in worldwide map	Pre-loaded ready to unlock	Built in map to 64 nm
Waypoints and routes	Unlimited with USB Memory stick extension	Stores up to 1000 waypoints, 500 routes (35 WP per route)
Estimated time of arrival	Yes	Yes
Distance and bearing calculator	Yes	Yes
Waypoint upload/download from PC	Yes (through USB storage device)	Yes (Via Navionics Nav Planner software or via CF memory card)
Waypoints and route transfer via NMEA	Yes	Yes
Chart orientation	Head Up, North Up or Course Up	Course up, heading up, leg up, north up.
Steering screen	2D steering screen and 3d 'Highway' screen	2D steering screen and 3D "Highway" screen.
Radar chart overlay	Yes optional heading sensor required	

FISHFINDER/SOUNDER	8000i	6100i
Network Sounder	Optional module	Optional 491
Waterproof rating of sounder	IPx7	EN60529 IP65
Compliance of sounder	IEC 60945	EN60945 CE
Output power of sounder	1000 W or 600 W	1000 W or 600 W
Bottom lock, zoom, A- Scope	Yes	Yes
Transducer options (not supplied)	See page 42	AIRMAR or others (see page 42)
Water temperature	Yes	Yes
SoundTrac	scrolling and zooming of sounder history	scrolling and zooming of sounder history
Frequency	Dual Frequency (50/200 kHz)	Single/Dual frequency (60/200 kHz)
Fish symbols	Yes	No
Fish, bottom, temperature alarms	Yes	Yes
Auto modes	Fishing or Cruising	Fishing or Cruising
Waypoint interface	User can place waypoint directly onto sounder history	User can save current position and go directly to past echo
INSTRUMENTATION	**8000i**	**6100i**
Number of customizable panels	100	Data and panels can be customized but not their positions.
GPS Clock	shows GPS time in position screen	Yes
Anchor watch	Yes	Yes
ENTERTAINMENT	**8000i**	**6100i**
Music	Stored music library, or CD player. Each display has audio out. All controls integrated into system UI	No
Video input	Stored video library or DVD player. 8000i 15" monitor supports additional analogue or digital video inputs.	One video input per display
Network video servers	Axis Ethernet cameras and Axis 241Q Video Server for composite video input	Not compatible

HIGH DEFINITION DIGITAL RADAR SPECIFICATIONS

PHYSICAL / DIFFERENCES	25 KW 7' (2.13 M)	10 KW 6' (1.89 M)	6 KW 4' (1.22 M)	4 KW 24" (610 MM)	2 KW 18" (458 MM)
Weight (without cable)	64 lb (29 kg)	56 lb (25 kg)	52 lb (24 kg)	22 lb (10 kg)	9 lb (4.2 kg)
Dimensions (mm)	L2235 x W462 x H534 mm	L1869 x W437 x H449 mm	L1285 x W344 x H432 mm	620 x 620 x 280 mm	450 x 450 x 227 mm
Max. Range Scale (nm)	96 nm	72 nm	64 nm	48 nm	24 nm
Horizontal beam width	1.0°	1.2°	1.8°	4°	5.2°
Noise Figure	6 dB	6 dB	6 dB	6 dB	7 dB
Voltage	21.6 V - 31.2 V	21.6 V - 41.6 V	10.8 V - 42 V	10.8 V - 42 V	10.8 V - 15.6 V
Power Consumption	180 W (Max) *	250 W (Max)	120 W (Max)	30 W	25 W
Rotation Speed	27 RPM	27 RPM	27 RPM	27 RPM	27 RPM
Pulse Length / PRF	0.07 µs / 2250 Hz 0.2 µs / 2250 Hz 0.4 µs / 1400 Hz 0.8 µs / 750 Hz 1.0 µs / 650 Hz 1.2 µs / 510 Hz	0.08 µs / 2250 Hz 0.25 µs / 1700 Hz 0.5 µs / 1200 Hz 1.0 µs / 650 Hz	0.08 µs / 2250 Hz 0.25 µs / 1700 Hz 0.5 µs / 1200 Hz 1.0 µs / 650 Hz	0.08 µs / 2250 Hz 0.25 µs / 1700 Hz 0.5 µs / 1200 Hz 1.0 µs / 650 Hz	0.08 µs / 2250 Hz 0.3 µs / 1200 Hz 0.8 µs / 600 Hz
Processor Weight	0.9 kg	0.9 kg	0.9 kg	0.9 kg	0.9 kg
Processor Dimensions	200 x 140 x 55 mm	200 x 140 x 55 mm	200 x 140 x 55 mm	200 x 140 x 55 mm	200 x 140 x 55 mm

* The 25 kW radar scanner uses less power than the 10 kW because the 25 kW uses a more efficient motor that operates over a narrower voltage range.

GPS ANTENNA SPECIFICATIONS

PHYSICAL / DIFFERENCES	124	133
Weight (without cable)	165 g (5.3 oz.)	140 g (4.5 oz.)
Installation	Flat surface or 1" Ø 14 TPI UNB	Flat surface or 1" Ø 14 TPI UNB
Cable Length	10 m (32.8 ft)	10 m (32.8 ft)
Power Supply	Via Northstar chartplotter	Via Northstar chartplotter
Power Consumption (typical)	55 mA (at 12 V DC)	20 mA (at 6 V DC)
GPS Dynamics	950 m/s (2125 mph), accel. 4 G	950 m/s (2125 mph), accel. 4 G
Operating Temperature	0 - 60°C (32 - 140°F)	0 - 60°C (32 - 140°F)
Re-acquisition times	2 s typical (<10 s blockage)	2 s typical (<10 s blockage)
TTFF*: Warm start / Cold start	< 48 s / < 120 s	< 48 s / < 120 s
Update Rate	Once per second, continuous	Once per second, continuous
Accuracy	Within 32 ft 95% of the time	Within 32 ft 95% of the time
Output	NMEA 0183 (ver 2) GGA, RMC, GSA, GSV	50 Ω
Case	UV Stable plastic radome, waterproof design	UV Stable plastic radome, waterproof design
Connector Type	LT 8	SMA

* Figures provided for Time to First Fix are for 90% or better for first fix.

COMBO & M SERIES SPECIFICATIONS

PHYSICAL DIFFERENCES	M121	M84	660	650	657
Pixel Dimensions	800 x 600	800 x 600	800 x 480	320 x 234	640 x 480
Screen Size	12.1" (304 mm)	8.4" (212 mm)	7" (178 mm)	5" (127 mm)	5" (127 mm)
Power Consumption (backlight on)	15 W or 1.1 A at 13.8 V	15 W or 1.1 A at 13.8 V	19.3 W or 1.4 A at 13.8 V	13.8 W or 1 A at 13.8 V	13.8 W or 1 A at 13.8 V
C-Map cartridge slots	2 x SD Card	2 x SD Card	1 x C Card	1 x C Card	1 x C Card
C-Map user card support	Yes, on SD cards	Yes, on SD cards	✓	✓	✓
Output Power (RMS)	600 | 1000 W	600 | 1000 W	600 W	600 W	600 W
Depth Range (with supplied transducer)	0.6 – 1000 m (2 - 3300 ft)	0.6 – 1000 m (2 - 3300 ft)	0.6 – 600 m (2 - 2000 ft)	0.6 – 600 m (2 - 2000 ft)	0.6 – 600 m (2 - 2000 ft)
Radar input	✓	✓	×	×	×
AIS input	✓	✓	×	×	✓
Video input	BNC connector (PAL / NTSC)	BNC connector (PAL / NTSC)	×	×	×

MULTIFUNCTIONAL UNITS: COMMON FEATURES

Backlighting	White, 16 levels	Operating Voltage	10.5 V - 32 V DC
Operating Temperatures	0 to 50 °C (32 to 122 °F)	Transmit Frequency	50 kHz / 200 kHz
Keypad	Laser etched silicone rubber and backlit	Water Temperature	Yes, with trend graph
Waterproof Rating	IPx7 (Immersed 3 ft (1 m) water for 30 minutes)	Transducer Options	Transom, through-hull and in-hull
Mounting	Flush or bracket mount	Auto Range / Auto Gain	✓
Beeper	Audible beeper with external alarm output	Split / Full Screen Zoom	✓
Cartography	NT MAX on SD Card or C-Map C-Card (check specific product specifications)	Bottom Lock	✓
Worldwide background Map	✓	Bottom Indication	16 color
PC Interface	Yes, via C-Map's PC Planner (ask your Northstar dealer)	Ping Rate (per second)	Over 50/s
Waypoint Memory	3000 alphanumeric	Sonar History Playback	✓
Waypoint/ MOB Hotkey	✓	Instant Fuel Flow	Gasoline
Routes	25 with up to 50 waypoints per route	Fuel used and remaining	Gasoline
Chart Display Options	North, Track and Course up	Fuel Economy and Fuel range	Gasoline
Plotting Scales	1/8 NM to 4096 NM	SmartCraft™	Yes, with optional SmartCraft gateway
Alarms	Arrival Radius, Danger, Anchor, XTE, Too Shallow, Too Deep, Fish, Low Battery, Temperature Value, Temperature Rate, Low Fuel	NMEA 0183 (ver 2) Input	Standard input from GPS or DGPS receiver, BWR, DBT, DPT, GGA, GLL, GSA, GSV, HDG, HDM, HDT, MTW, MWV, RMC, VHW and VTG
Celestial Data	Tide Data (with nearest tide station, peak tide times and depths), local time, moon phase, sunrise and sunset	NMEA 0183 (ver 2) Output	APA, APB, BWR, DBT, DPT, GGA, GLL, GSA, GSV, MTW, RMB, RMC, VHW, VLW, VTG, XDR and XTE
Tracklogs	5 Tracklogs: 1 x 2000 points, 4 x 500 points (time or distance)	NavBus / Data repeat display screen	✓
Track-Your-Buddy	✓	Fish Symbols (with depth)	3 sizes with or without depth indication
Languages	English, French, German, Dutch, Danish, Swedish, Finnish, Spanish, Portuguese, Italian, Norwegian, Croatian and Greek	Fish Forecast / Weather Watch	✓

NORTHSTAR EXPLORER SERIES CHARTPLOTTER SPECIFICATIONS

PHYSICAL / DIFFERENCES	567	557	550(i)
Pixel Dimensions	640 x 480	640 x 480	320 x 240
Screen Size	6.4" (163 mm)	5" (127 mm)	5" (127 mm)
Weight	0.9 kg (2 lb)	0.7 kg (1.5 lb)	0.6 kg (1.3 lb)
Power Consumption (backlight on)	0.6A at 13.8 V DC	0.5A at 13.8 V DC	0.5A at 13.8 V DC
Antenna Type	124 (with 10 m cable)	124 (with 10 m cable)	133 (with 10 m cable), 550i : Internal
Worldwide Background Map	✓	✓	✓

NORTHSTAR EXPLORER SERIES CHARTPLOTTERS: COMMON FEATURES

Operating Temperatures	0 to 50 °C (32 to 122 °F)
Supply Voltage	10.5 - 32 V DC
Beeper	Audible beeper with external alarm output
Keypad	Laser etched silicone rubber and backlit
Waterproof Rating	IPx7
Mounting	Flush or bracket mount (no flush mount for 550i)
Backlighting	White, 16 levels
Cartography	C-Map NT MAX™
Non-Volatile Memory	✓
Celestial Data	Tide Data (with nearest tide station, peak tide times and depths), local time, moon phase, sunrise and sunset
C-Map user card support	✓
Chart Datums	128 Chart Datums
Routes	25 with up to 50 waypoints per route
LCD Display Type	256 color TFT

Plotting Scales	1/8 NM to 4096 NM
Alphanumeric Waypoint Memory	3000
Waypoint/ MOB Hotkey	✓ / ✓
Alarms	Arrival Radius, Danger, Anchor, XTE, Low Fuel
C-Map cartridge slots	1 x C Map C Card
Tracklogs	5 Tracklogs: 1 x 2000 points, 4 x 500 points (time or distance)
Chart Display Options	North, Track and Course up
Languages	English, French, German, Dutch, Danish, Swedish, Finnish, Spanish, Portuguese, Italian and Greek
SmartCraft™	Yes, with optional SmartCraft gateway
NMEA 0183 (ver 2) Input	Standard input from GPS or DGPS receiver, BWC, DPT, DBT, HDG, HDT, MTW, RMC, VHW, VLW, VTG and VPW
NMEA 0183 (ver 2) Output	APA, APB, BWC, GGA, GLL, RMB, RMC, VTG, XTE
NavBus / Data repeat display screen	✓
PC Interface	Yes, via C-Map's PC Planner (ask your Northstar dealer)
VHF DSC Interface	✓

NORTHSTAR EXPLORER SERIES FISHFINDER SPECIFICATIONS

PHYSICAL DIFFERENCES	467	457
Screen Size	6.4" (163 mm)	5" (127 mm)
Power Consumption (backlight on)	13 W or 1.0 A @ 13.8 V DC	12.4 W or 0.9 A @ 13.8 V DC

NORTHSTAR EXPLORER SERIES FISHFINDERS: COMMON FEATURES

Pixel Dimensions	480 x 640
Supply Voltage	10-32 V DC
LCD Display Type	256 color TFT
Bottom Indication	16 color
Transmit Frequency	50 kHz | 200 kHz
Output Power (RMS)	600 W
Depth Range (with supplied transducer)	0.6 — 600 m (2 — 2000 ft)
Ping Rate (per second)	Up to 50
NMEA 0183 (ver2) Output	DBT, DPT, VHW, MTW, VLW, XDR
NavBus	✓
Operating Temperatures	0 to 50 °C (32 to 122 °F)
Beeper	Audible beeper with external alarm output
Keypad	Laser etched silicone rubber and backlit
Waterproof Rating	IPx7
Mounting	Flush or bracket mount
Backlighting	White, 16 levels
Alarms	Too shallow, Too deep, fish, low battery, temp value, temp rate
Non-Volatile Memory	✓
Boat Speed & Log	✓

Fish Forecaster /Weather Watch	Yes with optional VHF 721
Fish Symbols (with depth)	✓
Audible buzzer / External output	✓✓
Sounder Snooze Mode	✓
Auto Range / Auto Gain	✓
A-Scope perspective view	x
Sonar History Playback	✓
Split / Full Screen Zoom	✓✓
Bottom Lock	✓
Fuel Management	✓
Fuel Used / Remaining	✓
Fuel Economy	✓
SmartCraft™	Yes with optional Smartcraft gateway
Low Fuel Alarm	✓
Battery Voltage / Engine Hours	✓
Transducer options	Transom, through-hull and in-hulll
Water temperature	Yes, with trend graph
Languages	English, French, German, Dutch, Danish, Swedish, Finnish, Spanish, Portuguese, Italian and Greek

VHF RADIO SPECS

PHYSICAL / DIFFERENCES	721 BASE UNIT	701 2ND STATION	710 BASE UNIT	NS100 SINGLE AND DUAL STATIONS
Dimensions w/o Bracket	6.4 W x 2.8 H x 5.8 D" (162 x 75 x 147 mm) Handset 2.5 W x 5.9 H x 1.4 D " (63 x 149 x 35 mm)	Handset 2.5 W x 5.9 H x 1.4 D " (63 x 149 x 35 mm)	6.4 W x 2.8 H x 5.8 D" (162 x 75 x 147 mm) Handset 2.5 W x 5.9 H x 1.4 D " (63 x 149 x 35 mm)	Handset: 68(W) x 140(H) x 30(T) mm Speaker: 140(W) x 148(H) x 49(T) mm Box: 220(W) x 173(H) x 50(T) mm
Weight	1.36 kg (3.0 lb) w/o mic	0.28 kg (10 oz.) w/o cord	1.29 kg (2.8 lb) w/o Mic	Handset: 10 oz (0.28 kg), Speaker: 11 oz (0.31 kg), box: 3.0 lbs (1.36 kg)
LCD display (viewing)	50 x 45 mm (1.9 x 1.6") FSTN 4 x 12 character	26 x 46 mm (1 x 1.8") FSTN 4 x 12 character	26 x 46 mm (1 x 1.8") FSTN 4 x 12 character	24 x 48 mm (0.95 x 1.9") FSTN, 4 x 12 character
Current drain transmit	6 A at 25 W / 1.5 A at 1 W	~From base station: Under 100 mA	6 A at 25 W / 1.5 A at 1 W	6A at 25W Tx / 1.5A at 1W Tx
Receive	Under 250 mA in Standby		Under 250 mA in Standby	Under 400 mA in Standby
Output power	25 W/ 1 W selectable	Operational from handset	25 W/ 1 W selectable	25 W/ 1 W selectable
Audio output power	2 W (with 8 Ω at 10% distortion) 4 W with 4 Ω external speaker	40 mm speaker - 0.5 W (1 W max.)	2 W (with 8 Ω at 10% distortion), 4 W with 4 Ω external speaker	1W (handset), 2W (external speaker), 20W into 4 Ω (hailer)
User programmable MMSI ID & NAME directory	20 numbers + Group + ATIS	20 numbers + Group + ATIS	20 numbers + Group + ATIS	✓
Comm. port	4800 baud NMEA and 38,400 baud NavBus	Proprietary high-speed duplex link	4800 baud NMEA	4800 baud NMEA
Mode	16K0G3E (FM) / 16K0G2B (DSC)		16K0G3E (FM) / 16K0G2B (DSC)	16K0G3E (FM)/16K0G2B (DSC)
Useable Channels (country specific)	International, ATIS, US, Canada, Weather	International, ATIS, US, Canada, Weather	International, ATIS, US, Canada, Weather	International, ATIS, US, Canada, Weather
Transmitter frequency	156.025 - 157.425 MHz	156.025 - 157.425 MHz	156.025 - 157.425 MHz	156.025 - 157.425 MHz
Receiver frequency	156.025 -163.275 MHz	156.025 -163.275 MHz	156.025 -163.275 MHz	156.025 -163.275 MHz
Call logs	20 Individual and 10 Distress	20 Individual and 10 Distress	20 Individual and 10 Distress	Yes (20 individual, 10 distress, 10 distress relay)
Current barometric pressure, Outside Air Temperature, Happy Fish, and 5 Wx forecast Icons	960 - 1050 mb at 1 mb increments, -20 to 50 °C	Enviromental information available in TEXT mode	×	×
12 dB SINAD sensitivity	0.25 µV (distant) / 2.5 µV (local)	0.25 µV (distant) / 2.5 µV (local)	0.25 µV (distant) / 2.5 µV (local)	0.25 µV (distant) / 2.5 µV (local)
20 dB SINAD sensitivity	0.35 µV (distant) 3.5 µV (local)	0.35 µV (distant) 3.5 µV (local)	0.35 µV (distant) 3.5 µV (local)	0.35 µV (distant) 3.5 µV (local)
GPS / NMEA output	✓	✓	✓	✓
DSC (Class D)	✓	✓	✓	✓
Local / Distant control	✓	✓	✓	✓
Position polling	✓	✓	✓	✓
Track-Your-Buddy	✓	✓	×	×
Intercom with talkback	✓	✓	×	×

ALL RADIO BASE UNITS SHARE THE FOLLOWING FEATURES:

Power Supply: 13.6 V DC
Battery monitor: Yes
Compass safe distance: 0.45 m
Temperature Range: 5 to 122 °F (-15 to 50 °C)
Waterproof Rating: JIS-7
Antenna connector: SO-239 (50 Ω)
Transmitter protection: Open/ short circuit of antenna
Dual watch/ All scan / Favorite channel scan: Yes

Residual Noise Level: More than -40 dB unsquelched
Spurious & Harmonics: 80 dBc at 25 W, 60 dBc at 1 W
Spurious noise: More than 70 db
Frequency Stability: ± 10 ppm
Adjacent CH selectivity: More than 70 dB
Intermodulation rejection ratio: More than 68 dB
Frequency control: PLL
Max. frequency deviation: ± 5 kHz

Modulation distortion: Less than 4% at 1 kHz for a ± 3 kHz deviation

AUTOPILOT AND INSTRUMENTS SPECIFICATIONS

PHYSICALDIFFERENCES/ COMMON FEATURES	AP380	NS3300	210 SERIES INSTRUMENTS
Display size	3.8" (97 mm) diagonal	W6.29" (160 mm) x H4.68" (119 mm) x D2.44" (62 mm)	3-character LCD
Display type	256 color TFT, 320 x 240 pixels		TN Temperature compensated, Mono - Segmented
Night view	backlight, 16 levels, backlit keypad		Red LED
Installation	Flush mount or bracket		Flush mount - Ø 50 mm hole, no screws
Depth behind faceplate (flush mount)	0 mm		95 mm minimum
Operating Voltage (DC)	10.5 - 30.5 V	8 - 30 V	8 - 16.6 V
Operating Temperature	0 to 50 °C (32 to 122 °F)		
Waterproof Rating	IPx6, IPx7		IPx 6
Smartcraft	✓	x	x
Power consumption (backlight on)	410 mA	360 mA	F210: 70 mA
Power consumption (backlight off)	160 mA		F210: 70 mA
Alarms	200 mA (switch to ground)		Fuel Alarm

AP COREPACK

Operating voltage	10.5 to 16.5 V DC (Note: AP380 will also operate with higher voltages)
Drive output current	20 A
Drive output voltage	10.5 to 16.5 V DC
Multiple display head capable	✓
NavBus	✓
NMEA Input ports	1
NMEA Input messages	APA, APB, BOD, BWC, MWD, MWV, RMA, RMB, RMC, VHW, VTG, XTE
NMEA Output ports	1 (can be programmed as an output)
NMEA Output messages	HDG, HDT, RSA, BWR, VWR
Rudder Gain adjustment	User adjustable 1-10
Counter rudder adjustment	User adjustable 1-10
Adjustable turn rate limit	User adjustable 1-10
Remote control input	Auto Indicator, Auto, > and < buttons
Jog inputs	Non follow up
Hardware current limit	Fixed protection > 25 A
User selectable current limit	2 to 20 A user selectable
Protective fuses	(Internal) 2 x 20 A ATC Blade
Clutch/Auto relay output	300 mA / 30 V max (switched to negative in Auto)
Valve/Solenoid output	User Selectable Switched to Negative/Positive 20 A max
Reversing Pump/Motor output	20 A m ax
Small mounting footprint	150 x 250 mm

NORTHSTAR CORE PACK

Flux gate compass	UV stable enclosure suitable for above or below deck mounting, c/w 5 m cable and connector
Rate Gyro standard	UV stable enclosure suitable for above or below deck mounting, c/w 5 m cable and connector
Rudder feedback sensor	Waterproof, hall effect, 360° rotation, glass filled nylon, c/w 10 m cable and connector

Gasoline Transducers:
Back pressure generated by the gasoline/ petrol fuel sensor on the feed line: ½ inch/ mercury with a 75 liter/ hour consumption, 1 inch/ mercury with a 150 liter/ hour consumption.
Always be careful not to exceed the maximum back pressure for your engine when adding additional components to a fuel system. If in doubt, check with your engine supplier and have your local dealer measurethe existing back pressure in your system before fitting the fuel flow sensor.

TRANSDUCERS

PHYSICAL / DIFFERENCES	°C/F	SPEED	DRILLING (Ø MM)	CABLE LENGTH (M)	BEAM WIDTH @ -3 DB	PLUG	CONNECTS TO	PART NUMBER
1kW DUAL FREQUENCY (50/200kHz) DEPTH TRANSDUCERS suitable for 1kW applications or high performance 600W applications								
Bronze Long Stem Thru-Hull Depth / Temp (B258)	✓	x	25 (1")	10 (33 ft)	19° / 6°	LT6 f	8000i Sounder, M121, M84, Explorer 660, 657, 650, 467, 457	AA002657
Bronze Depth 1kW 20degree tilted element (B164), *Suitable for deep-vee hulls*	✓	x	95 (3 3/4 ")	10 (33 ft)	45° / 11°	LT6 f	8000i Sounder, M121, M84, Explorer 660, 657, 650, 467, 457	AA002028
In-hull (Shoot-thru) Depth (M260)	x	x	—	10 (33 ft)	19° / 6°	LT6 f	8000i Sounder, M121, M84, Explorer 660, 657, 650, 467, 457	AA002016
Bronze Long Stem Thru-Hull Performance Depth / Temp (B260)	✓	x	25 (1")	10 (33 ft)	19° / 6°	LT6 f	8000i Sounder, M121, M84, Explorer 660, 657, 650, 467, 457	AA002660
In-hull (Shoot-thru) Depth (M260)	x	x	—	10 (33 ft)	19° / 6°	CX10 m	491 Sounder (for 6100i)	TD1009
Bronze Long Stem Thru-Hull Performance Depth / Temp (B260)	✓	x	25 (1")	10 (33 ft)	19° / 6°	CX10 m	491 Sounder (for 6100i)	TD1004
600 W DUAL FREQUENCY (50 / 200 kHz) DEPTH TRANSDUCERS and DEPTH / SPEED / TEMPERATURE TRIDUCERS								
Plastic Transom Mount Triducer	✓	✓	—	10 (33 ft)	38° / 11°	LT6 f	8000i Sounder, M121, M84, Explorer 660, 657, 650, 467, 457	AA002077
In-Hull (Shoot-thru) Depth (P79)	x	x	—	8 (26 ft)	45° / 11°	LT6 f	8000i Sounder, M121, M84, Explorer 660, 657, 650, 467, 457	AA002001
Plastic Flush Thru-Hull Depth (P319)	x	x	51 (2")	9 (30 ft)	45° / 12°	LT6 f	8000i Sounder, M121, M84, Explorer 660, 657, 650, 467, 457	AA002017
Bronze Flush Thru-Hull Depth (B117)	x	x	51 (2")	9 (30 ft)	45° / 12°	LT6 f	8000i Sounder, M121, M84, Explorer 660, 657, 650, 467, 457	AA002018
Bronze Flush Thru-Hull 20 Degree Tilted Element Depth *Suitable for deep-vee hulls* (B60)	x	x	51 (2")	9 (30 ft)	45° / 12°	LT6 f	8000i Sounder, M121, M84, Explorer 660, 657, 650, 467, 457	AA002025
Bronze Thru-Hull Triducer *Includes high-speed fairing block* (B744V)	✓	✓	51 (2")	10 (33 ft)	45° / 12°	LT6 f	8000i Sounder, M121, M84, Explorer 660, 657, 650, 467, 457	AA002008
Plastic Transom Mount Triducer (P66)	✓	✓	—	10 (33 ft)	45° / 11°	CX10 m	491 Sounder (for 6100i)	TD1006
Bronze Thru-Hull Triducer *Includes High-Speed Fairing Block* (B744V)	✓	✓	51 (2")	10 (33 ft)	45° / 12°	CX10 m	491 Sounder (for 6100i)	TD1005
Bronze Long Stem Thru-Hull Triducer (B744VL)	✓	✓	51 (2")	10 (33 ft)	45° / 12°	CX10 m	491 Sounder (for 6100i)	TD1008

PHYSICAL / DIFFERENCES	°C/F	SPEED	DRILLING (Ø MM)	CABLE LENGTH (M)	BEAM WIDTH @ -3 DB	PLUG	CONNECTS TO	PART NUMBER
SPEED / TEMPERATURE TRANSDUCERS for display of boatspeed with a thru-hull depth transducer (all speed / temperature transducers require adapter cable AA002429)								
Plastic Transom Mount Speed / Temperature (requires adapter cable AA002410)	✓	✓	—	8 (26 ft)	—	FUJI4 f	8000i Sounder, M121, M84, Explorer 660, 657, 650, 467, 457	AA002151
Plastic Thru-Hull Speed / Temperature		✓	42 (1 5/8")	8 (26 ft)	—	LT8 f	8000i Sounder, M121, M84, Explorer 660, 657, 650, 467, 457	AA002082
SMART DIGITAL DEPTH TRANSDUCERS delivering NMEA depth strings to GPS chartplotters for data header display.								
Plastic Digital Depth (DT-800)	✓	x	51 (2")	10 (33 ft)	13°	wires	Explorer 567, 557, 550(i), 6100i	AA002021
Bronze Digital Depth	✓	x	51 (2")	10 (33 ft)	13°	wires	Explorer 567, 557, 550(i), 6100i	AA002022

Other transducers may also be available suitable for use with your Northstar product – contact your dealer for details. Not all transducers will be available in all regions.

TRANSDUCER TIPS

Boat Type/Hull Material	GRP/Fiberglass	Aluminum	Wood
Outboard engine planing hull	Transom mount, Through hull plastic or bronze, In hull	Transom mount, Through Hull Plastic	Transom mount, Through hull bronze
Inboard engine planing hull	Through hull plastic or bronze. In Hull	Through Hull plastic or Stainless steel with insulator kit	Through hull bronze or stainless steel
Yacht or displacement hull	Through hull plastic or bronze. In Hull	Through Hull plastic or Stainless steel with insulator kit	Through Hull plastic or Stainless steel with insulator kit

- Installation is critical to the performance of your sonar; the best sonar available is next to useless with a poorly installed transducer. Follow the installation guide carefully.
- Never install a plastic through hull transducer into a wooden hull as swelling of the wood can crush the transducer and cause leaking.
- Never use bronze transducers on Aluminum or Steel hulls as galvanic corrosion can occur.
- Stainless steel transducers can be used on aluminium and steel hulls but an insulating kit MUST be used.

EXTENSION AND ADAPTER CABLES FOR 8000i AND 6100i

DESCRIPTION	INSTRUMENTS USED	PART
8000i Power and Data Cables		
2 m (6 ft) Utility data cable	8000i Processors, 15" Monitor, Radar	NS004801
8000i Video Cables		
2 m (6 ft) Composite video cable 8000i Composite to BNC	8000i 15" monitor	NS004803
2 m (6 ft) S-video cable 8000i S-Video to S-video	8000i 15" monitor	NS004804
2 m (6 ft) DVI-D cable connect a DVI device to 8000i 15" monitor	8000i 15" monitor	NS004805
2 m (6 ft) LTW - LTW cable for 8000i processor to 8000i 15" monitor	8000i 15" monitor	NS004806
2 m (6 ft) LTW - DSUB m cable	8000i 15" monitor	NS004807
8000i Ethernet Cables		
0.5 (1.7 ft) m ethernet cable	8000i Processors, 1kW sounder, all radars and 8000i 8 Port	NS004810
2 m (6 ft) ethernet cable	8000i Processors, 1kW sounder, all radars and 8000i 8 Port	NS004811
5 m (16 ft) ethernet cable	8000i Processors, 1kW sounder, all radars and 8000i 8 Port	NS004812
10 m (32 ft) ethernet cable	8000i Processors, 1kW sounder, all radars and 8000i 8 Port	NS004813
0.3 m (1 ft) ethernet joiner cable F/F	8000i Processors, 1kW sounder, all radars and 8000i 8 Port	NS004814
0.3 m (1 ft) ethernet x-over joiner cable F/F	8000i Processors, 1kW sounder, all radars and 8000i 8 Port	NS004815
6100i cables		
Interface cable for connection of SmartCraft or radar to 6100i displays	6100i all sizes	NS003107
2m extension cable for use in connecting radar to 6100i with NS003107	6100i all sizes	NS003108
15 m (50') cable for connection of Sirius antenna to weather module	6100i all sizes, Weather module	NS004821
27 m (90') cable for connection of Sirius antenna to weather module	6100i all sizes, Weather module	NS004822
1m (3ft) ethernet crossover cable	6100i all sizes (for connection of two displays)	WA575-A
2m (6ft) ethernet crossover cable	6100i all sizes (for connection of two displays)	WA593-A
20m (64ft) ethernet crossover cable	6100i all sizes (for connection of two displays)	WA576-A
5m (16ft) ethernet passthru cable	6100i all sizes (for connection of display to switch)	WA560-A
20m (64ft) ethernet passthru cable	6100i all sizes (for connection of display to switch)	WA577-A

EXTENSION AND ADAPTER CABLES FOR M SERIES AND EXPLORER SERIES

SMA m

SMA f

RCA m

RCA f

LT8 m

LT8 f

fUJI5 m

fUJI5 f

LT6 f

LT6 m

DESCRIPTION	INSTRUMENTS USED	PLUG TO INSTRUMENT	PLUG TO TRANSDUCER	PART
Transducer Extension Cables suitable for depth, speed, fuel or GPS Sensors				
4 m (13 ft) extension for LT6 plug transducers	M121, M84, Explorer 660, 657, 650, 467, 457	LT6 f	LT6 m	AA002415
20 m (66 ft) extension for LT6 plug transducers	M121, M84, Explorer 660, 657, 650, 467, 457	LT6 f	LT6 m	AA002416
5 m (16 ft) m extension for SMA plug GPS antenna	Explorer 550	SMA f	SMA m	AA002408
5 m (16 ft) m extension for FUJI plug Fuel sensor	F210	FUJI5 f	FUJI5 m	AA002168
Multi-purpose Extension Cables suitable for fuel or GPS sensors, G-Pilot components (Compass, Rate Gyro, RFU), and radar processor box extensions *				
5 m (16 ft) general purpose LT8 plug extension cable	All LT8 plug instruments	LT8 f	LT8 m	AA002430
10 m (33 ft) general purpose LT8 plug extension cable	All LT8 plug instruments	LT8 f	LT8 m	AA002431
15 m (50 ft) general purpose LT8 plug extension cable	All LT8 plug instruments	LT8 f	LT8 m	AA002432
20 m (66 ft) general purpose LT8 plug extension cable	All LT8 plug instruments	LT8 f	LT8 m	AA002433
Transducer and sensor adapter cables (see transducer table for details on depth, temperature and speed transducers				
Y - Cable for fuel or Navbus + NMEA-in	467, 457, 660, 550(i)	LT8 f	LT8 m + breakout wires	AA002464
Y - Cable for FUEL or NavBus* + NMEA-in or AIS	M121, M84	LT8f	LT8 m + breakout wires	AA002464
Tri - Cable for GPS + Fuel + NMEA - in or AIS	657, 650, 567, 557	LT8f	LT8 m + breakout wires	AA002458
Y Adapter for LT8 plug speed and LT6 plug depth transducers	M121, M84, 660, 657, 650, 467, 457	LT6 f	LT8 m and LT6 m	AA002429
Adapter to LT6 for Airmar dual frequency transducers with Airmar 8 pin connector	M121, M84, 660, 657, 650, 467, 457	LT6 f	Airmar 8 pin	AA006678
Adaptor to LT6 for dual frequency transducers with Motorguide 9 pin connector	M121, M84, 660, 657, 650, 467, 457	LT6 f	Motorguide 9 pin	AA002418

* Multi-purpose Extension Cables
All cables have LT8 female connectors with one male / female adapter.

Note: Cables, sun covers, mounting kits and other parts supplied with Northstar products are also supplied as spare parts. Contact your Northstar dealer for details.

SPATIAL DIMENSIONS

8000i

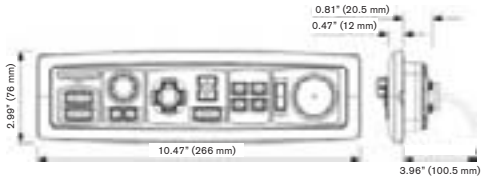

8000i 15" Remote Keypad

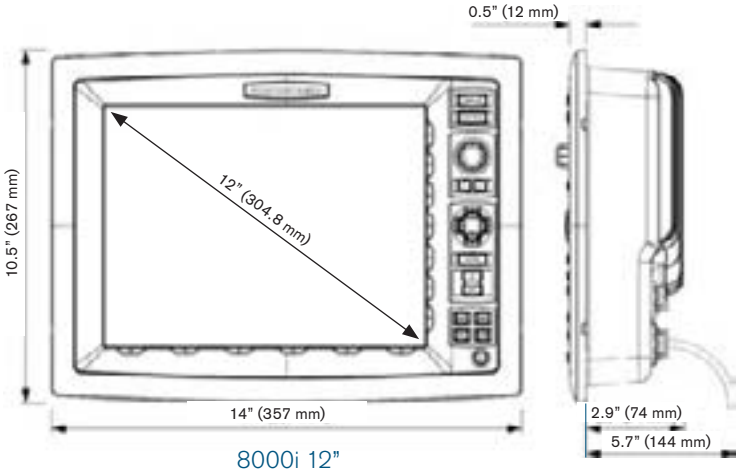

8000i 12"

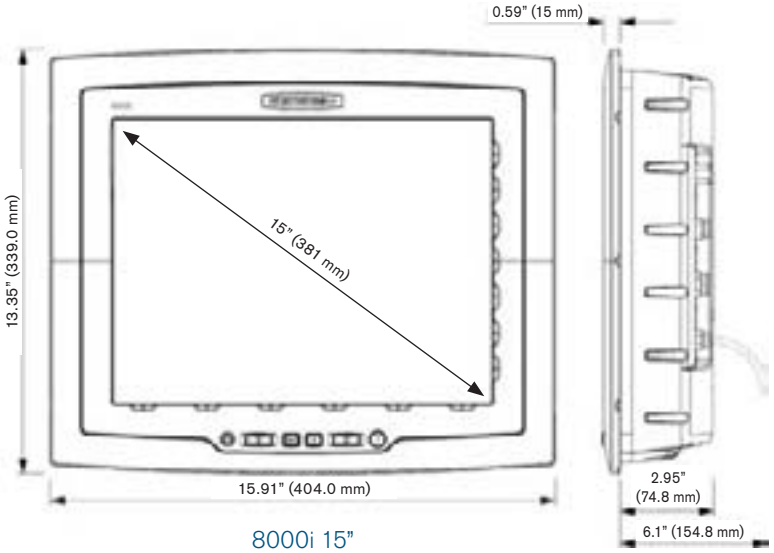

8000i 15"

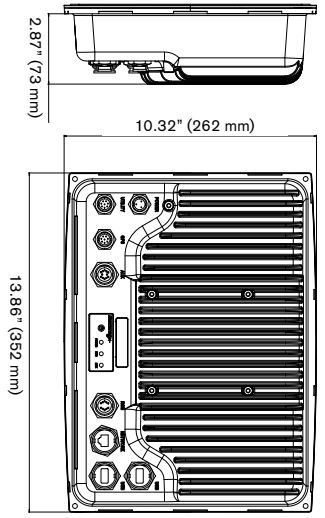

8000i Processor

M SERIES

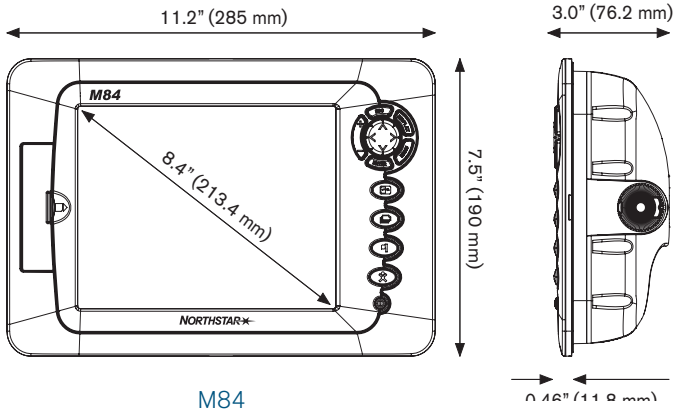

M84

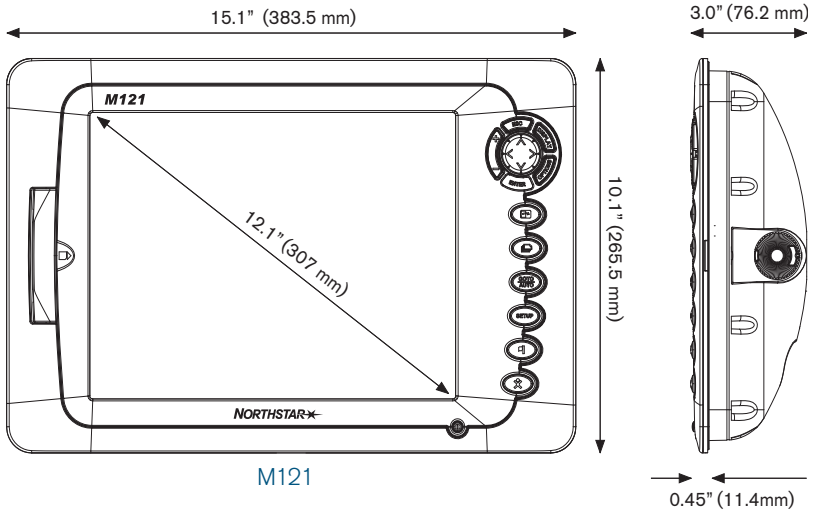

M121

NORTHSTAR 6100i 6.4”, 8.4”, 10.4”, 12”, and 15” DISPLAYS

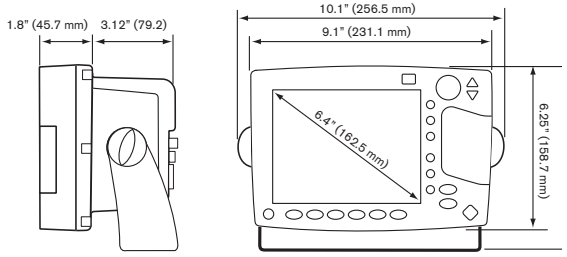

6100i 6.4"

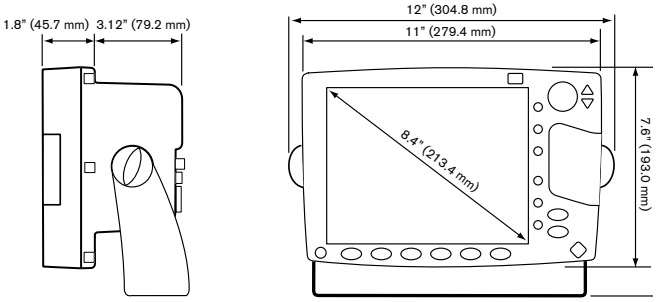

6100i 8.4"

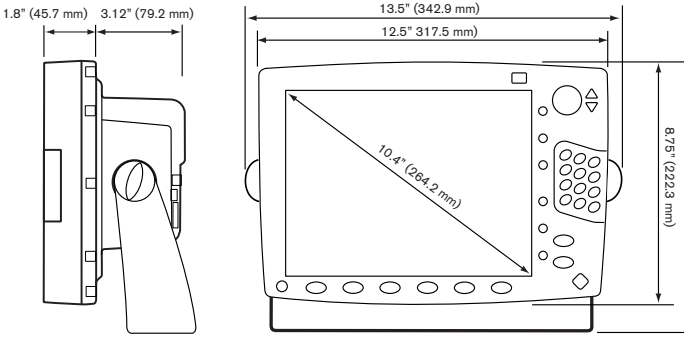

6100i 10.4"

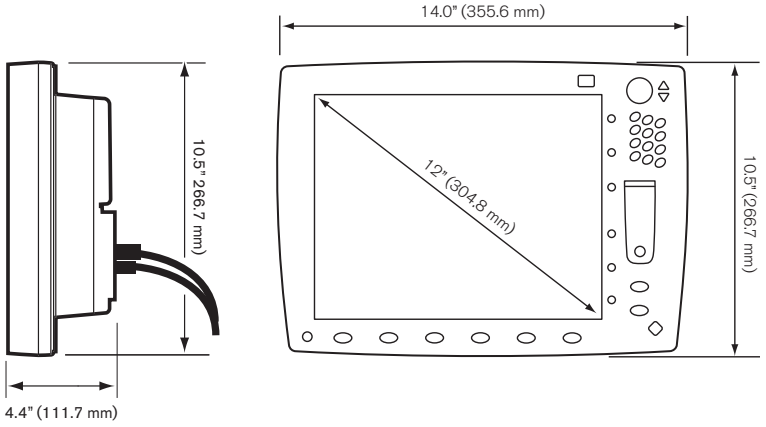

6100i 12"

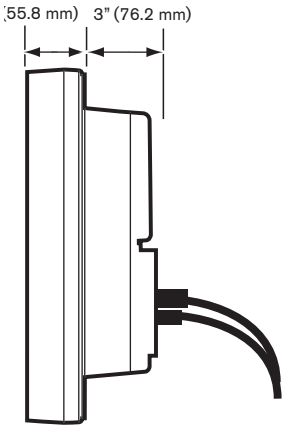

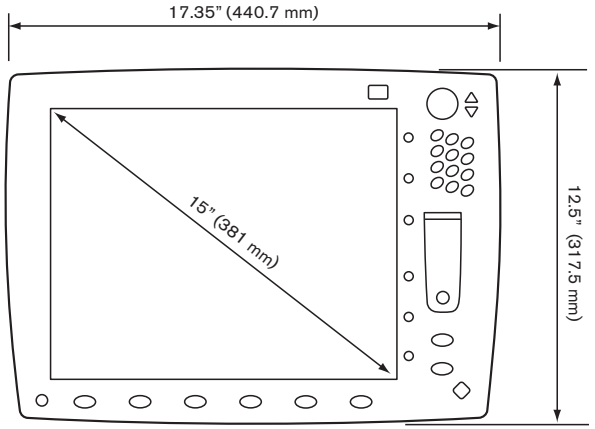

6100i 15"

VHF RADIOS

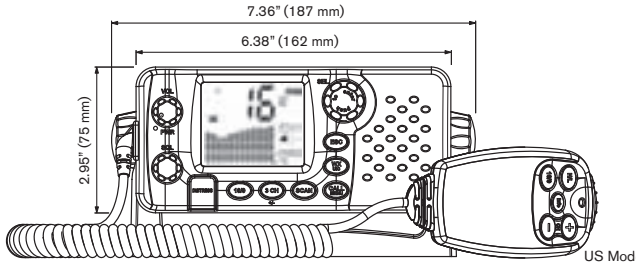

Explorer VHF Products: 721, 710

VHF NS100

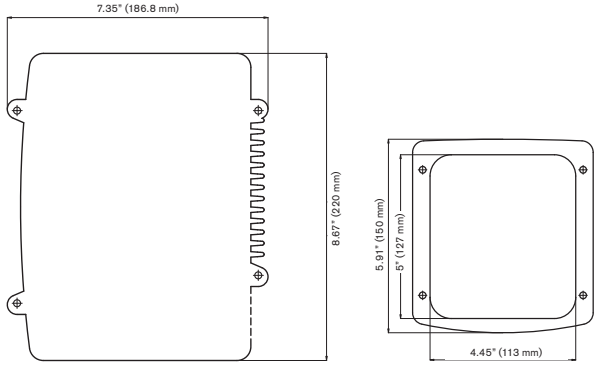

NS100 Blackbox & Speaker

AUTOPILOTS NS3300, AP380 AND 6" PRODUCTS

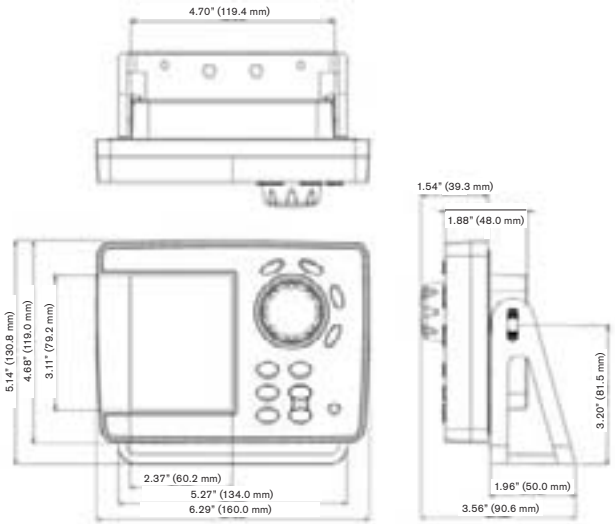

NS 3300 Autopilot

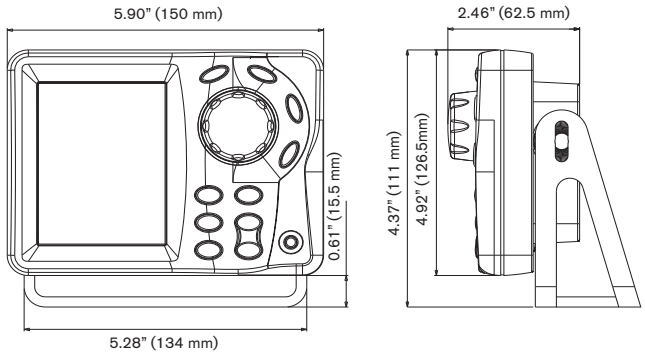

Explorer AP380

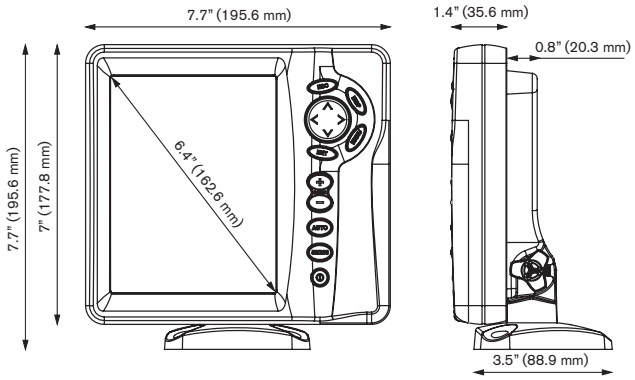

Explorer 6" Products: 567, 467

RADOMES AND ARRAYS

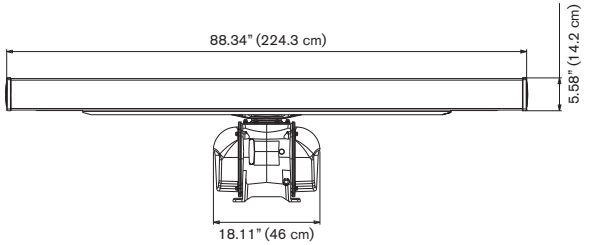

25 kW Scanner

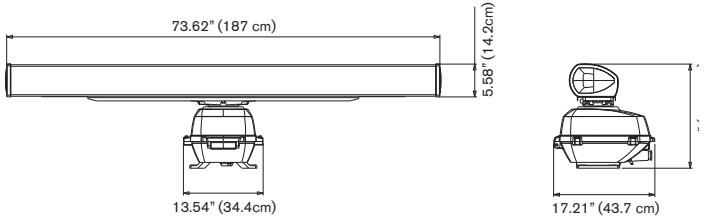

10 kW Scanner

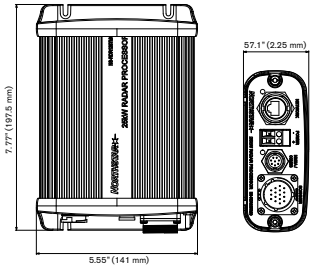

Radar Processor

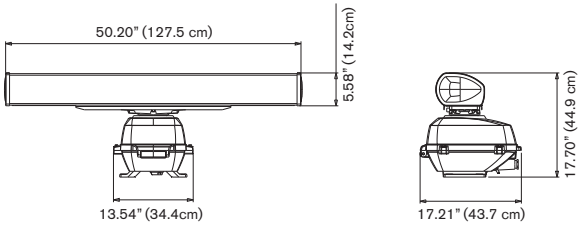

6 kW Scanner

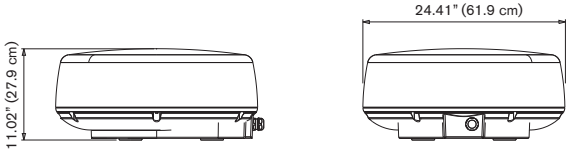

4 kW Scanner

2 kW Scanner

EXPLORER 5" AND EXPLORER 660

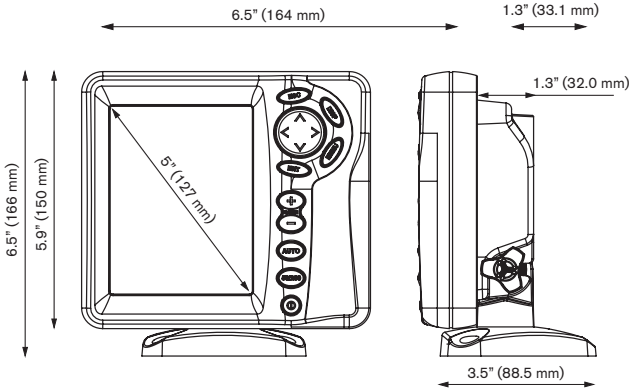

Explorer 5" Products: 650, 657, 550, 557, 457

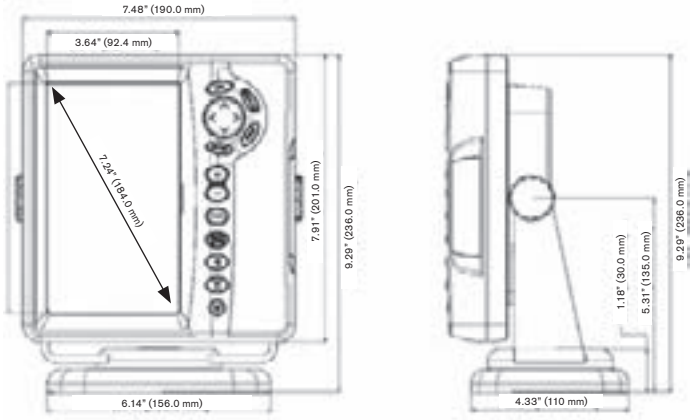

Explorer 660

ABOUT NAVICO

Navico is the parent company to seven well established marine electronics brands: B&G, Eagle, Lowrance, MX Marine, Navman, Northstar and Simrad. Navico has approximately 2,800 employees globally and 2006 pro forma revenues of close to USD 320 million. Navico is headquartered in Oslo, Norway. The company has development and manufacturing facilities in Tulsa, Oklahoma, Acton, Massachusetts, Torrance, California USA; Ensenada, Mexico; Egersund, Norway; Romsey, UK; and Auckland, New Zealand.

navico

All rights reserved. Navico Inc. 2007
Every effort has been made to ensure the information given in this catalogue is correct at the time of printing. Navico reserves the right to change the information within this catalogue without prior notice. © Navico 2007.

SALES AND SERVICE WORLDWIDE

EUROPE

CROATIA/SLOVENIA

Meridian Projekt
Savska 129,
10000 Zagreb, Croatia
Tel: +385-1-6176-364
Fax: +385-1-6176-365
www.meridianprojekt.com

ESTONIA

Admiral Trade OÜ
Regati 1, 11911 Tallinn
Tel: + 372 639 89 46
Fax: + 372 639 89 30

FINLAND

Oy Maritim AB
P.O. Box 46
00211 Helsinki
Tel: + 358 207 65 180
Fax: + 358 207 652 943
http://www.maritim.fi

FRANCE

Navico France S.A.
Parc d'Activitès Ragon,
23 Avenue Pasteur
44 119 Treillieres
Tel: + 33 2 28 01 23 01
Fax: + 33 2 28 01 21 43

GERMANY/AUSTRIA

Navico GmbH
Carl-Friedrich-Gauss Strasse 2
24837 Schleswig, Germany
Tel: + 49 4621 96130
Fax: + 49 4621 961329

GREECE AND CYPRUS

Aegean Electronics S.A.
4 Zosimadon Str
185 21 Piraeus, Greece
Tel: + 302 10 413 7269
Fax: + 302 10 413 7270
http://www.aegean-electronics.gr

BENELUX

Navico Benelux BV
Donker Duyvisweg 56
3316 BM Dordrecht, Holland
Tel: + 31 78 653 0000
Fax: + 31 78 653 0001

HUNGARY

Twinport System KFT
2370 DABAS
Vasarter UT 1

ICELAND

Fridrik A. Jonsson H
Akralind 2
210 Kopavogur
Tel: + 354 552 2111
Fax: + 354 552 2115
http://faj.is/old/

ITALY

Navico Italia Srl.
Via Benadir 14
20132 Milan
Tel: + 39 02 26149517
Fax: + 39 02 8970035

MALTA

RLR Ltd
156, Ta' Xbiex Sea Front
Gzira, GZR 03
Tel: +356 21335591
Fax: +356 21344615
darius@rlryachting.com

NORWAY

ProNav AS
Hovlandsveien 52
4370 Egersund
Tel: +47 51464300
Fax: +47 51492100
www.pronav.no

POLAND

Parker Poland Sp.z o.o
Czastkow Polski 171
05-152 Czosnow
Tel. +4822-7851111
Fax: +4822-7850999
www.parker.com.pl

ROMANIA

Navtron Srl
7 Vasile Marcovici Street
9100130 Constanta
Tel: +40 241 545 649
Fax : +40 241 555 582

SWEDEN

Masternav AB
Billdalsvagen 2
427 36 Billdal
http://www.masternav.se/

SPAIN/ PORTUGAL

Navico Marine Electronics S.L.
Pol. Ind. Finestrat nave 14
Avda. Pais Valenzia 28
03509 Finestrat , Spain
Tel: + 34 902 350 750
Fax: + 34 902 350 959

SWITZERLAND

Marine Parts Technics AG
Pfaffikerstr. 6
8604 Volketswil/Zürich
Tel: + 41 1 997 40 90
Fax: + 41 1 997 40 94
http://www.marineparts.ch/

TURKEY

Promar Marine Equip. Ltd.
Igrip Sokak Gul. Apt. No: 7/2
81030 Fenerbache (Istanbul)
Tel: + 90 216 3460894
Fax: + 90 216 3461493
http://www.promar.com.tr/

UK/ IRELAND

Navico Ltd (UK)
Premier Way, Abbey Park,
Romsey Hampshire, S051 9DH, UK
Tel: + 44 1794 51 0010
Fax: + 44 1794 51 0006

AMERICA

UNITED STATES OF AMERICA

NAVICO America
12000 East Skelly Drive
Tulsa,
Oklahoma 74128
Tel: 1-800-324-1356

NAVICO NORTHEAST
30 Sudbury Rd
Acton
MA 01720
Tel: 1-800-628-4487
Fax: 1-978-897-7241
ns-salesmktg@navico.com

NAVICO NORTHWEST
1010 SE Everett Mall Way
Suite 101
Everett, WA 98208
Tel: (425) 778-8821

AUSTRALIA

NAVICO Australia Pty Ltd
Unit 5, 12 Mars Rd,
Lane Cove NSW 2066
Australia
Tel: +02 9936 1000
Fax: +02 9936 1001
sales.aus@navico.com

Oceantalk
36/176 South Creek Road,
Dee Why, Sydney NSW 2099
Tel: +61 29981 9500
Fax: (02) 9981 9555
sales@oceantalk.com.au

ASIA-PACIFIC

NEW ZEALAND

Advance Trident Limited
383 New North Road
Kingsland, Auckland
P.O Box 4174
Tel: +64 9 845 5347
Fax: +64 9 845 5348
sales@advancetrident.com

SINGAPORE/MALAYSIA

Jason Electronics Pte Ltd
J194 Pandan Loop #06-05
PanTech Industrial Complex
Singapore
Tel: +65 68720211
Fax: +65 6872 1800
sales@jason.com.sg

THAILAND

Ping Electric Co. Ltd
2/ 80 Sreesutus Rd
Russada Muang, Phuket
Tel: +66 76 224847
Fax: +66 76 252144
ping@yahoo.com

CHINA/HONG KONG

Peaceful Marine Electronics Co. Ltd
1701 Yanjiang Building
195 Yan Jiang Zhong Rd. 510115
Guangzhou, China
Tel: +86 20 3869 8839
Fax: +86 20 3869 8780
sales@peaceful-marine.com

TAIWAN

Seafirst International Corporation
No. 281, Hou-An Road
Chien-Chen Dist. Kaohsiung
Tel: +886 7 831 2688
Fax: +886 7 831 5001
seafirst@seed.net.tw

KOREA

Turn-On Electronics Co
7th FL. Dong-A Ilbo Bldg
53-11, 4-KA, Choongang-Dong,
Choong-Ku
Busan, Korea
Tel: +82 (51) 4623930
sales@turnon.co.kr

TAHITI

Tahiti Sport
PO Box 62
98713 Papeete, French Polynesia
Tel: +689 505959
Fax: +689 42 17 75
nautipro@nautisport.pf

NEW CALEDONIA

Altomarine
ZT Nouville Plaisance
9 Rue Capitaine BOIS
98846 Noumea BP 14348
Tel: +687 259612
Fax: +687 254330
sales@altomarine.com

AFRICA / UAE

SOUTH AFRICA

Marine Radio Acoustic Devices
P.O. Box 12076, N1 City 7463
Cape Town
Tel: + 27 21 559 4003
Fax: + 27 21 559 2752

UNITED ARAB EMIRATES

Elcome International LLC
Zabeel East, Al Jadaf Area
P.O. Box 1788
Dubai
Tel: +97 1440 49100
Fax: +97 1440 49200

Emphor FZCO
Jebel Ali Free Zone
P.O. Box 61232, Dubai
www.emphor.biz

LA010140A-G

NORTHSTAR